**Article I. Purpose and Administration**

**8.40.010 Purpose, objectives, and authority.**

(1) The purpose of this chapter is to protect the public health by minimizing:

(a) The potential for public exposure to sewage from on-site sewage systems; and

(b) Adverse effects to public health that discharges from on-site sewage systems may have on ground and surface waters.

(2) This chapter regulates the location, design, installation, operation, maintenance, and monitoring of on-site sewage systems to:

(a) Achieve effective long-term sewage treatment and effluent dispersal; and

(b) Limit the discharge of contaminants to waters of the state.

(3) The state board of health is authorized under RCW 43.20.050 to establish minimum requirements for the department of health and local boards of health, and consistent with RCW 43.70.310 integrating the preservation of public health with protection of the environment in order to endorse policies in common.

(4) This chapter is intended to coordinate with other applicable statutes and rules for the design of on-site sewage systems under Chapter 18.210 RCW and Chapter 196-33 WAC.

(5) This chapter is intended to coordinate with other applicable statutes for land use planning under Chapters 36.70 and 36.70A RCW, and the statutes for subdivision of land under Chapter 58.17 RCW.

(6) The local health officer may designate low-lying marine shorelines in their jurisdiction.

8.40.015 Applicability

(1) The local health officer:

(a) Shall apply this chapter to OSS for treatment, siting, design, installation, and operation and maintenance measures treating sewage and dispersing effluent from residential sources with design flows up to 3,500 gallons per day;

(b) May apply this chapter to OSS for nonresidential sources of sewage if treatment, siting, design, installation, and operation and maintenance measures provide treatment and effluent dispersal equal to that required of residential sources;

(c) Shall not apply this chapter to industrial wastewater.

DRAFT

(2) The department shall apply the requirements of this chapter for the registration of proprietary treatment and distribution products.

(3) A valid OSS design approval, or installation permit issued prior to the effective date of these rules:

(a) Shall be acted upon in accordance with the requirements of this chapter in force at the time of issuance;

(b) Remains valid for a period of not more than five years from the date of approval or issuance, or remains valid for an additional year beyond the effective date of this chapter, whichever has the most lenient expiration date; and

(c) May be modified to include additional requirements if the health officer determines that a serious threat to public health exists.

(4) This chapter does not apply to facilities regulated as reclaimed water use under chapters 90.46 RCW and 173-219 WAC.

~~[Ord. II.Ord.061107 §1, 2007]~~

**8.40.020 Application and scope.**

(1) These rules and regulations shall apply to all areas of Lewis County, Washington. It shall be unlawful to occupy, dwell in, own, or rent a dwelling unit, commercial structure, recreational development or other structure without one of the following systems in proper working order:

(a) A sewage system approved through these rules and regulations; or

(b) A municipal sewerage system; or

(c) A sewage system approved through earlier ordinances, regulations, or resolutions of Lewis County or Lewis County health district; or

(d) A sewage system installed prior to the enactment of any sewage disposal ordinance, regulations, or resolutions of Lewis County or Lewis County health district; or

(e) A system approved by the health officer.

(2) These regulations do not apply, except as specifically noted, to public sewage collection and treatment systems.

(3) These rules and regulations shall be mandatory upon the construction of all new sewage systems, and the expansion or alteration of existing sewage systems, whether

DRAFT

serving a residence, structure, or mobile dwelling unit from which human or other wastes are produced. These rules and regulations shall be mandatory upon all persons creating and disposing of sewage, and all persons constructing or altering sewage systems within Lewis County. ~~[Ord. II.Ord.061107 §1, 2007]~~

**8.40.030 Administration and fees.**

(1) The health officer and the department shall administer this chapter under the authority and requirements of Chapters 70.05, 70.08, 70.118, 70.46, and 43.70 RCW. RCW 70.05.060(7) authorizes health officers to charge fees for the administration of this chapter.

(2) The health officer may assess reasonable fees for all permits or other services or actions provided for in this chapter. The fees shall be charged in amounts specified in the Lewis County schedule of fees as adopted and updated periodically by resolution of the Lewis County board of county commissioners, except that the health officer may charge pro rata fees for those inspections and reviews completed prior to a written request for refund. The fee schedule shall be on file with the health officer. ~~[Ord. II.Ord.061107 §1, 2007]~~

**8.40.040 Definitions.**

~~(1) Acronyms used in this chapter:~~

~~"ANSI" means American National Standards Institute.~~

~~"BOD" means biochemical oxygen demand, typically expressed in mg/L.~~

~~"$CBOD_5$" means carbonaceous biochemical oxygen demand, typically expressed in mg/L.~~

~~"FC" means fecal coliform, typically expressed in number of colonies/100 ml.~~

~~"LOSS" means a large on-site sewage system (see Chapter 246-272B WAC).~~

~~"NSF" means National Sanitation Foundation International.~~

~~"O&G" (formerly referred to as FOG) means oil and grease, a component of sewage typically originating from food stuffs (animal fats or vegetable oils) or consisting of compounds of alcohol or glycerol with fatty acids (soaps and lotions). Typically expressed in mg/L.~~

~~"OSS" means on-site sewage system.~~

~~"RS&G" means recommended standards and guidance.~~

~~"SSAS" means a subsurface soil absorption system.~~

DRAFT

~~"TAC" means the technical advisory committee established in WAC 247-272A-0400.~~

~~"TN" means total nitrogen, typically expressed in mg/L.~~

~~"TSS" means total suspended solids, a measure of all suspended solids in a liquid, typically expressed in mg/L.~~

~~"USEPA" means United States Environmental Protection Agency.~~

~~(2) Definitions used in this chapter:~~

"Additive" means a commercial product added to an on-site sewage system intended to affect the performance or aesthetics of an on-site sewage system.

"ANSI" means American National Standards Institute.

"Approved" means a written statement of acceptability issued by the health officer or the department.

"Bank" means any naturally occurring slope greater than 100 percent (45 degrees) and extending vertically at least 45 feet from the toe of the slope as follows:

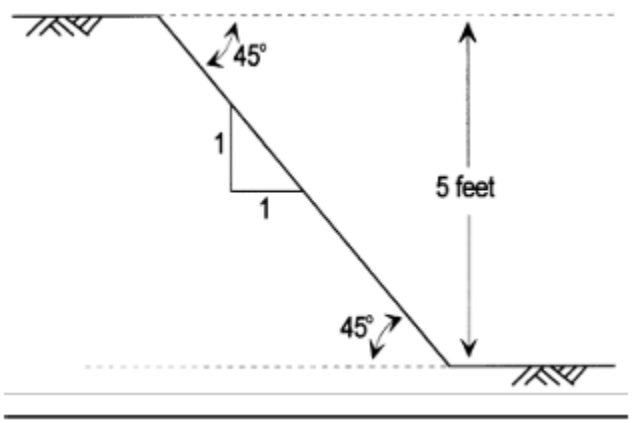


"Bed" means a soil dispersal component consisting of an excavation with a width greater than three feet.

"BL" means bacterial level.

"Black water" means any waste from toilets or urinals.

"BOD" means any biochemical oxygen demand, typically expressed in mg/L.

“Building drain” means that part of the lowest piping of a building’s drainage system that receives the discharge of sewage from pipes inside the walls of the building and conveys it to the building sewer beginning two feet outside the building wall.

“Building sewer” means that part of the horizontal piping of a drainage system extending from the building drain, which collects sewage from all the drainage pipes inside a building, to an on-site sewage system. It begins two feet outside the building wall and conveys sewage from the building drain to the remaining portions of the on-site sewage system.

“$CBOD_5$ “means carbonaceous biochemical oxygen demand, typically expressed in mg/L.

“Cesspool” means a pit receiving untreated sewage and allowing the liquid to seep into the surrounding soil or rock.

“Conforming system” means any on-site sewage system or component, meeting any of the following criteria:

(a) In full compliance with new construction requirements under this chapter; or

(b) Approved, installed and operating in accordance with requirements of previous editions of this chapter; or

(c) Permitted by the waiver process under WAC 246-272A-0420 ~~that assures public health protection by higher treatment performance or other methods~~.

“Cover material” means soil placed over a soil dispersal component composed predominately of mineral material with no greater than 10 percent organic content. Cover material may contain an organic surface layer for establishing a vegetative landscape to reduce soil erosion.

“Cuts and/or banks” means any naturally occurring or artificially formed slope greater than 100 percent (45 degrees) and extending vertically at least five feet from the toe of the slope

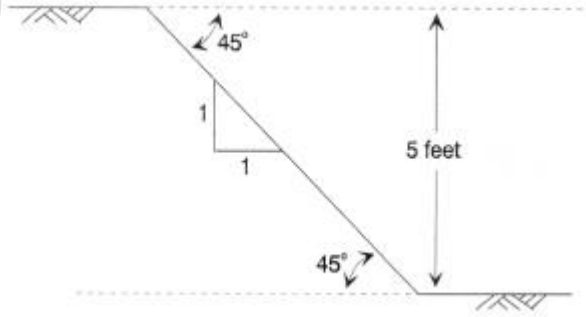


to the top of the slope as follows:

“Department” means the Washington State Department of Health.

DRAFT

“Designer” means a person who matches site and soil characteristics with appropriate on-site sewage technology. Throughout this chapter this term applies to both on-site sewage treatment system designers licensed under Chapter 18.210 RCW and professional engineers licensed under Chapter 18.43 RCW.

“Design flow” means the maximum volume of sewage a residence, structure, or other facility is estimated to generate in a 24-hour period. It incorporates both an operating capacity and a surge capacity for the system during periodic heavy use events. The sizing and design of the on-site sewage system components are based on the design flow.

“Detention pond” means an earthen impoundment used for the collection and temporary storage of stormwater runoff.

“Development” means the creation of a residence, structure, facility, subdivision, site, area, or similar activity resulting in the production of sewage.

“Disinfection” means the process of destroying pathogenic microorganisms in sewage through the application of ultraviolet light, chlorination, or ozonation.

“Distribution technology” means any arrangement of equipment and/or materials that distributes sewage within an on-site sewage system.

~~Drain Field. See “subsurface soil absorption system (SSAS)” and “soil dispersal component.”~~

“Drainrock” means clean washed gravel or crushed rock ranging in size from three-quarters inch to two and one-half inches, and containing no more than two percent by weight passing a US No. 8 sieve and no more than one percent by weight passing a US No. 200 sieve.

“DS&G” means department standards and guidance.

“E. coli” means Escherichia coli bacteria. Counts of these organisms are typically used to indicate potential contamination from sewage or to describe a level of needed disinfection, typically expressed as colony forming units/100 mL.

“Effluent” means liquid discharged from a septic tank or other on-site sewage system component.

“EPA” means United States Environmental Protection Agency.

DRAFT

“Expanding clay” means a clay soil with the mineralogy of clay particles, such as those found in the Montmorillonite/Smectite Group, which causes the clay particles to expand when they absorb water, closing the soil pores, and contract when they dry out.

“Expansion” means a change in a residence, facility, site, or use that:

(a) Causes the sewage quantity or quality to exceed the existing design flow of the on-site system; for example, when a residence is increased from two to three bedrooms or a change in use from an office to a restaurant; or

(b) Reduces the treatment or dispersal capability of the existing on-site sewage system or the reserve area; for example, when a building is placed over a reserve area.

“Extremely gravelly” means soil with 60 percent or more, but less than 90 percent, rock fragments by volume.

“Failure” means a condition of an on-site sewage system or component that threatens the public health by inadequately treating sewage or by creating a potential for direct or indirect contact between sewage and the public. Examples of failure include:

(a) Sewage on the surface of the ground;

(b) Sewage backing up into a structure caused by slow soil absorption of septic tank effluent;

(c) Sewage leaking from a sewage tank or collection system;

(d) Cesspools or seepage pits where evidence of ground water or surface water quality degradation exists;

(e) Inadequately treated effluent contaminating ground water or surface water; or

(f) Noncompliance with standards stipulated on the permit.

“Fecal coliform” means bacteria common to the digestive systems of warm-blooded animals that are cultured in standard tests. Counts of these organisms are typically used to indicate potential contamination from sewage or to describe a level of needed disinfection typically~~. Generally~~ expressed as colonies per 100 mL~~l~~.

“Fill” means unconsolidated material that:

(a) Meets soil types 1-6 textural criteria and is used as part of a soil dispersal component;
(b) Is used to change grade or to enhance surface water diversion; or
(c) Is any other human-transported material.

DRAFT

“Flood plain” means an area that is low-lying and adjacent to a stream or river that is covered by water during a flood.

“GPD” means gallons per day.

“Gravelly” means soils with 15 percent or more, but less than 35 percent, rock fragments by volume.

“Gray water” means sewage from ~~bathtubs, showers, bathroom sinks, washing machines, dishwashers, and kitchen sinks. It includes sewage from~~ any source in a residence or structure that has not come into contact with toilet or urinal wastes, including bathtubs, showers, bathroom sinks, washingmachines, dishwashers, and kitchen sinks.

“Ground water” means subsurface water occupying the zone of saturated soil, permanently, seasonally, or as the result of the tides. Indications of ground water may include:

(a) Water seeping into or standing in an open excavation from the soil surrounding the excavation or monitoring ports.

(b) Spots or blotches of different color or shades of color interspersed with a dominant color in soil, caused by reduction and oxidation of iron. These color patterns are redoximorphic features, commonly referred to as mottling. Redoximorphic features often indicate the intermittent presence of ground water and may indicate poor aeration and impeded drainage. Also see “water table.”

Health Officer. See “local health officer.”

“Holding tank sewage system” means an on-site sewage system which incorporates a sewage tank without a discharge outlet, the services of a sewage pumper/hauler, and the off-site treatment and disposal for the sewage generated.

“Hydraulic loading rate” means the amount of effluent applied to a given treatment step, in this chapter expressed as gallons per square foot per day (gal/sq.ft./day).

“Industrial wastewater” means the water or liquid carried waste from an industrial process. These wastes may result from any process or activity of industry, manufacture, trade or business, from the development of any natural resource, or from animal operations such as feedlots, poultry houses, or dairies. The term includes contaminated stormwater and leachate from solid waste facilities.

“Infiltration pond” means an earthen impoundment used for the collection, temporary storage, and infiltration of stormwater run-off.

DRAFT

“Infiltrative surface” means the surface within a treatment component or soil dispersal component to which effluent is applied and through which effluent moves into original, undisturbed soil or other porous treatment media.

“Installer” means a person approved by the health officer to install on-site sewage systems or components.

“Local health officer” or “health officer” means the health officer of the Lewis County department of health and social services, or a representative authorized by and under the direct supervision of the health officer, as defined in Chapter 70.05 RCW.

“LOSS” means a large on-site sewage system under chapter 246-272B WAC.

“Maintenance” means the actions necessary to keep the on-site sewage system components functioning as designed.

“Maintenance service provider” means a management entity certified by the local health officer and conducts a comprehensive analysis of an OSS.

“Malfunction” means a damaged or deficient previously conforming OSS component that may be corrected by means of a minor repair.

“Massive structure” means the condition of a soil layer in which the layer appears as a coherent or solid mass not separated into peds of any kind.

"mg/L” means milligrams per liter.

“mL” means milliliter.

“Minimum usable land area” means the minimum land area within the minimum lot size required per development using an OSS, which is based on soil type and type of water supply. Minimum usable land area is free of all physical restrictions and meet minimum vertical and horizontal separations.

“Minor repair” means the repair or replacement of any of the following existing damaged or malfunctioning OSS components except that the repair or replacement of a sewage tank, treatment component, or soil dispersal component is not considered a minor repair:

(a) Control panels;
(b) Building sewers;
(c) Any other portions of tightline in the OSS;
(d) Risers and riser lids;
(e) Sewage tank baffles;
(f) Effluent filters;

DRAFT

(g) Sewage tank pumps and lids;
(h) Pump control floats; and
(i) OSS inspection boxes and ports.

"Moderate structure" means well-formed distinct peds evident in undisturbed soil. When disturbed, soil material parts into a mixture of whole peds, broken peds, and material that is not in peds.

"Modification" means the alteration of an existing OSS component that does not result in an expansion of the system. A modification is not considered a repair.

"Monitoring" means periodic or continuous checking of an on-site sewage system, which is performed by observations and measurements, to determine if the system is functioning as intended and if system maintenance is needed. Monitoring also includes maintaining accurate records that document monitoring activities.

~~"On-site sewage system" (OSS) means an integrated system of components, located on or nearby the property it serves, that conveys, stores, treats, and/or provides subsurface soil treatment and dispersal of sewage. It consists of a collection system, a treatment component or treatment sequence, and a soil dispersal component. An on-site sewage system also refers to a holding tank sewage system or other system that does not have a soil dispersal component.~~

"NSF" means NSF International.

"O&G" means oil and grease, a component of sewage typically originating from food stuffs such as animal fats or vegetable oils, or consisting of compounds of alcohol or glycerol with fatty acids such as soaps and lotions, typically expressed in mg/L.

"Operating capacity" means the average daily volume of sewage an OSS can treat and disperse on a sustained basis. The operating capacity, which is lower than the design flow, is an integral part of the design and is used as an index in OSS monitoring.

"Ordinary high-water mark" means the mark on lakes, streams, springs, and tidal waters, found by examining the beds and banks and ascertaining where the presence and action of waters are so common and usual, and so long continued in all ordinary years, as to mark upon the soil a character distinct from that of the abutting upland with respect to vegetation, as that condition exists on the effective date of this chapter, or as it may naturally change thereafter. The following ~~definitions~~conditions apply where the ordinary high-water mark cannot be found:

DRAFT

(a) The ordinary high-water mark adjoining marine water is the elevation at mean higher high tide; and

(b) The ordinary high-water mark adjoining freshwater is the line of mean high water.

"OSS" means on-site sewage system, an integrated system of components, located on or nearby the property it serves, which conveys, stores, treats, and provides subsurface soil treatment and dispersal of sewage. It consists of a collection system, a treatment component or treatment component sequence, and a soil dispersal component. An OSS also refers to a holding tank sewage system or other system that does not have a soil dispersal component. The term "on-site sewage system (OSS)" does not include any system regulated by a water quality discharge permit issued under chapter 90.48 RCW.

"PAG" means policy advisory group.

"PDP" means product development permit.

"Ped" means a unit of soil structure such as a block, column, granule, plate or prism formed by natural processes.

"Person" means any individual, corporation, company, association, society, firm, partnership, joint stock company, or any governmental agency, or the authorized agents of these entities. For the purposes of LCC 8.40.350 and LCC 8.40.360, a person is defined to include:

(a) Applicant;
(b) Reapplicant;
(c) Permit holder; or
(d) Any individual associated with (a), (b), or (c) of this sub-section including, but not limited to:
    i. Board members;
    ii. Officers;
    iii. Managers;
    iv. Partners;
    v. Association members;
    vi. Agents; and
    vii. Third persons acting with the knowledge of such persons.

"Planned unit development" means a subdivision characterized by a unified site design, clustered residential units and/or commercial units, and areas of common open space.

"Platy structure" means soil that contains flat peds that lie horizontally and often overlap. This type of structure will impede the vertical movement of water.

DRAFT

"Pressure distribution" means a system of small diameter pipes equally distributing effluent throughout an ~~SSAS~~OSS, as described in the ~~department's "Recommended Standards and Guidance~~DS&G for Pressure Distribution Systems," ~~2001~~2002. A subsurface drip system ~~may be used wherever the chapter requires~~is considered a pressure distribution system.

"Professional engineer" means a person who is currently licensed as an engineer under the provisions of Chapter 18.43 RCW.

"Proprietary product" means a sewage treatment and distribution technology, method, or material subject to a patent or trademark.

"Public domain technology" means a sewage treatment and distribution technology, method, or material not subject to a patent or trademark.

"Public sewer system" means a sewerage system:

(a) Owned or operated by a city, town, municipal corporation, county, or other approved ownership consisting of a collection system and necessary trunks, pumping facilities and a means of final treatment and disposal; and

(b) Approved by or under permit from the department of ecology, the department of health and/or a local health officer.

"Pump chamber" means a watertight receptacle placed after a septic tank, sewage tank, or other treatment facility that contains the required controls and alarms to convey sewage effluent to a treatment or dispersal component.

"Pumper" means a person approved by the health officer to remove and transport sewage or septage from on-site sewage systems.

"Record drawing" means an accurate graphic and written record of the location and features of the OSS that is needed to properly monitor, operate, and maintain that system.

"Remediation" means any action, approved by the local health officer, which attempts to restore the function of a previously conforming OSS dispersal component that has failed. Remediation is not considered:

(a) A minor repair;
(b) A repair:
(c) An additive; or
(d) A treatment or distribution technology that allows the OSS to meet a specific treatment level.

DRAFT

"Repair" means the relocation, replacement or reconstruction of a failed on-site sewage system, or any OSS components not included in the list for a minor repair, which have failed in order to restore the OSS to a nonfailure status.

"Reserve area" means an area of land approved for the installation of a conforming system that is protected and maintained for replacement of the OSS upon its failure.

"Residential sewage" means sewage having the constituency and ~~strength~~quality typical of ~~wastewater from domestic households~~residential septic tank effleuent consistent with treatment level E identified in Table III in WAC 246-272A-0110.

"Restrictive layer" means a stratum impeding the vertical movement of water, air, and growth of plant roots, such as hardpan, claypan, fragipan, caliche, some compacted soils, bedrock and unstructured clay soils.

"Rock fragment" means rock or mineral fragments having a diameter of two millimeters or more, for example, gravel, cobbles, stones, and boulders.

"Seepage pit" means an excavation more than three feet deep where the sidewall of the excavation is designed to dispose of septic tank effluent. Seepage pits ~~may~~are also ~~be called~~known as "dry wells."

"Septage" means ~~the mixture of solid wastes, scum, sludge, and liquids pumped from within septic tanks, pump chambers, holding tanks, and other OSS components~~ liquid or solid material removed from sewage tanks, cesspools, portable toilets, type III marine sanitation devices, vault toilets, pit toilets, recreation vehicles holding tanks, or similar systems that received only domestic sewage.

"Septic tank" means a watertight treatment receptacle receiving the discharge of sewage from a building sewer or sewers, designed and constructed to ~~permit separation~~separate of settleable and floating solids from the liquid, detention and anaerobic digestion of the organic matter, prior to discharge of the liquid.

~~Septic System. See "on-site sewage system" or "OSS."~~

"Sewage" means any urine, feces, and the water carrying human wastes, including kitchen, bath, and laundry wastes from residences, buildings, industrial establishments or other places.

"Sewage quality" means contents in sewage that include:

(a) $CBOD_5$, TSS, and O&G;

DRAFT

(b) Other parameters that ~~can~~may adversely affect treatment. Examples include pH, temperature, and dissolved oxygen;

(c) Other constituents that create concerns due to specific site sensitivity. Examples include fecal coliform, E. coli, phosphorus and nitrogen.

"Sewage tank" means a prefabricated or cast-in-place septic tank, pump ~~tank/dosing~~chamber, dosing chamber, holding tank, grease interceptor, recirculating filter tank or any other tanks as they relate to on-site sewage systems, including tanks for use with proprietary products.

"Soil dispersal component" means a technology that releases effluent from a treatment component into the soil for dispersal, final treatment and recycling.

"Soil log" means a detailed description of soil characteristics providing information on the soil's capacity to act as an acceptable treatment and dispersal medium for sewage.

"Soil scientist" means a person certified by the American Society of Agronomy as a Certified Professional Soil Scientist.

"Soil type" means one of seven numerical classifications of fine earth particles and rock fragments as described in WAC 246-272A-0220(2)(e).

"Standard methods" means the ~~20th~~23rd Edition of "Standard Methods for the Examination of Water and Wastewater," prepared and published jointly by the American Public Health Association, the American Water Works Association and the Water Environment Federation.

"Strong structure" means peds are distinct in undisturbed soil. They separate cleanly when soil is disturbed, and the soil material separates mainly into whole peds when removed.

"Subdivision" means a division of land or creation of lots or parcels, described under Chapter 58.17 RCW, including both long and short subdivisions, planned unit developments, and mobile home parks.

"Subsurface drip system" means an efficient pressurized wastewater distribution system that can deliver small, precise doses of effluent to soil surrounding the drip distribution piping, also known as ~~(called~~ dripline~~)~~ as described in the ~~department's "Recommended Standards and Guidance~~DS&G for Subsurface Drip Systems 2020."

"~~Subsurface soil absorption system" (~~SSAS~~)~~" means ~~a~~subsurface soil absorption system that is a soil dispersal component of trenches or beds containing either a distribution pipe within a layer of drainrock covered with a geotextile, or an approved gravelless distribution technology, designed and installed in ~~original, undisturbed, unsaturated soil providing at~~

~~least minimal vertical separation as established in this chapter,~~ suitable soil with either gravity or pressure distribution of the treatment component effluent.

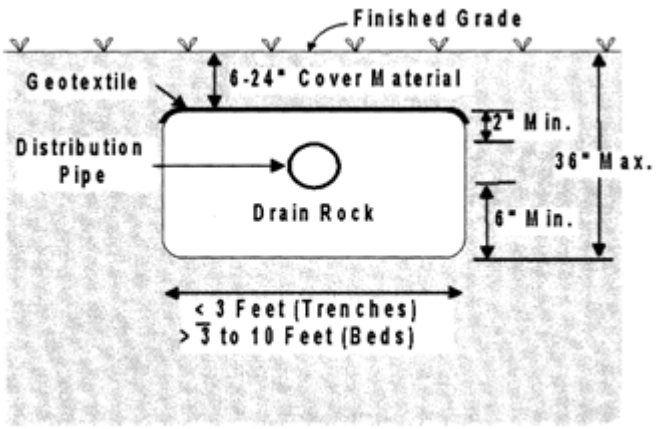


"Suitable" means original, undisturbed, unsaturated soil of soil types 1-6 with at least the vertical separation established in this chapter.

"Surface water" means any fresh or marine body of water~~, whether fresh or marine,~~ flowing or contained in natural or artificial unlined depressions for significant periods of the year, including natural and artificial lakes, ponds, springs, rivers, streams, swamps, marshes, irrigation canals and tidal waters.

"TAG" means the technical advisory group established in WAC 246-272A-0400.

"Timed dosing" means delivery of discrete volumes of sewage at prescribed time intervals.

"TN" means total nitrogen, typically expressed in mg/L.

"Treatment component" means a technology that treats sewage in preparation for further treatment and/or dispersal into the soil environment. Some treatment components, such as mound systems, incorporate a soil dispersal component in lieu of separate treatment and soil dispersal components.

"Treatment component sequence" means any series of treatment components that discharges treated sewage to the soil dispersal component.

"Treatment level" means one of ~~six~~ the following levels (A, B, C, BL1, BL2, BL3~~D~~, E, and N) ~~used in these rules~~ to:

(a) Identify treatment component performance demonstrated through requirements specified in WAC 246-272A-0110; and

(b) Match site conditions of vertical separation and soil type with treatment components.

DRAFT

~~Treatment levels used in these rules are not intended to be applied as field compliance standards. Their intended use is for establishing treatment product performance in a product testing setting under established protocols by qualified testing entities.~~

~~"Treatment sequence" means any series of treatment components that discharges treated sewage to the soil dispersal component.~~

"Trench" means a soil dispersal component consisting of an excavation with a width of three feet or less.

"TSS" means total suspended solids, a measure of all suspended solids in a liquid, typically expressed in mg/L.

"Unit volume of sewage" means:

(a) Flow from a single-family residence;

(b) Flow from a mobile home site in a mobile home park; or

(c) Four hundred fifty gallons of sewage per day where the proposed development is not single-family residences or a mobile home park.

"Unknown OSS" means an OSS that was installed without the knowledge or approval of the local health jurisdiction, including those that were installed before such approval was required.

"Unpermitted sewage discharge" means the discharge of sewage or treated effluent from an unknown OSS.

"Vertical separation" means the depth of unsaturated, original, undisturbed soil of soil types 1 through 6 between the bottom infiltrative surface of a soil dispersal component and the highest seasonal water table, a restrictive layer, or soil type 7 as illustrated below by the profile drawing of subsurface soil absorption systems:

DRAFT

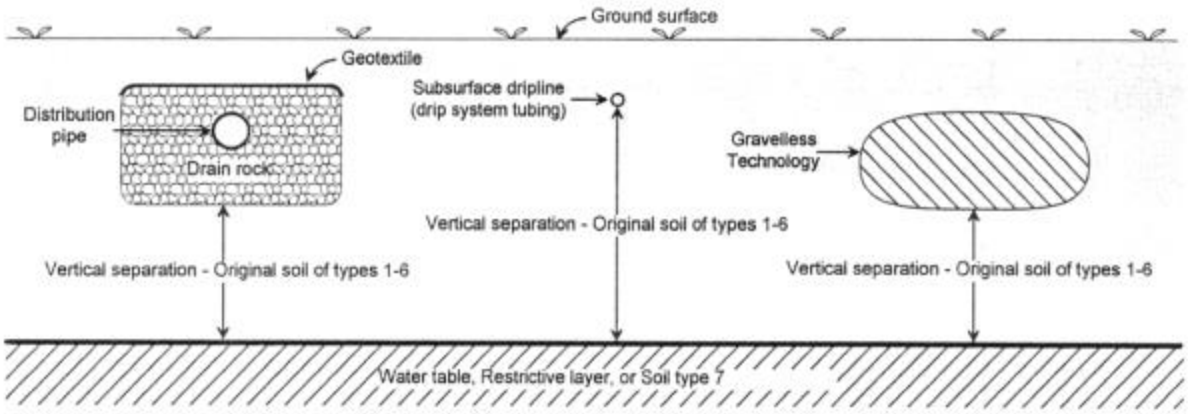


"Very gravelly" means soil containing 35 percent or more, but less than 60 percent, rock fragments by volume.

"Water supply protection zone" means the land area around each existing or proposed well site to protect the water supply from contamination.

"Water table" means the upper surface of the ground water, whether permanent or seasonal. Also see "ground water." As defined in this section.

"Well" means any excavation that is constructed when the intended use of the well is for the location, diversion, artificial recharge, observation, monitoring, dewatering or withdrawal of ground water for agricultural, municipal, industrial, domestic, or commercial use. ~~Excluded are:~~ The Following are not considered a well:

(a) A temporary observation or monitoring well used to determine the depth to a water table for locating an OSS;

(b) An observation or monitoring well used to measure the effect of an OSS on a water table; and

(c) An interceptor or curtain drain constructed to lower a water table.

(d) A dewatering well used temporarily for the purpose of a sewage tank or pump chamber installation. ~~[Ord. H.Ord.061107 §1, 2007]~~

**8.40.050 Local management and regulation.**

(1) The health officers for jurisdictions not required to develop a written plan under WAC 246-272A-0015(1) shall develop a written local management plan that will provide guidance to the local health jurisdiction regarding development and management activities for all OSS within the jurisdiction. At a minimum the plan shall include:

(a) A description of the capacity of the local health jurisdiction to provide education and operation and maintenance information for all types of systems in use within the jurisdiction;

(b) A description of how the health officer will remind and encourage homeowners to complete the operation and maintenance inspection required by WAC 246-272A-0270; and

(c) A description of the capacity of the local health jurisdiction to adequately fund the local OSS plan.

(2) In order to implement the plan described in this section, the health officer shall require the owner of the OSS to:

(a) Comply with additional requirements identified in the plan for the location, design, or performance; and

(b) Comply with the conditions of the operational permit if one is required.

(3) In order to implement the plan described in this section, the health officer may require the owner of the OSS to:

(a) Ensure additional maintenance and monitoring of the OSS;

(b) Provide dedicated easements for inspections, maintenance, and potential future expansion of the OSS;

(c) Place a notice to title identifying any additional requirements for OSS operation, maintenance and monitoring; and

~~(d) Have an inspection of the OSS at the time of property transfer, including the preparation of a "record drawing" if necessary.~~

~~(4) No later than July 1, 2006, the department shall develop guidance on local management programs to assist marine local health jurisdictions in plan development.~~

(4) The Washington State Department of Health will maintain and update guidance and provide technical assistance to assist local health jurisdiction in local management plan development.

~~(5) Until such time as the local board of health decides to adopt its own rules, the health officer shall enforce Chapter 246-272A WAC. Local boards of health may adopt and enforce local rules and regulations governing on-site sewage systems when the local regulations are:~~

~~(a) Consistent with, and at least as stringent as, this chapter; and~~

DRAFT

~~(b) Approved by the department prior to the effective date of local regulations.~~

~~(6) A local board of health shall apply for departmental approval of local regulations by initiating the following procedure:~~

~~(a) The local board shall submit the proposed local regulations to the department.~~

~~(b) Within 90 days of receipt, the department shall:~~

~~(i) Approve the regulation in writing; or~~

~~(ii) Signify automatic tacit approval with the local regulations and permitting local implementation by failing to act; or~~

~~(iii) Deny approval of the regulations. If the department determines local regulations are not consistent with this chapter, the department shall provide specific reasons for denial.~~

~~(7) Upon receipt of departmental approval or after 90 days without notification, whichever comes first, the local board may implement adopted regulations. The local board shall provide a copy of the adopted local regulations to the department.~~

~~(8) If the department denies approval of local regulations, the local board of health may:~~

~~(a) Resubmit revised regulations for departmental consideration; or~~

~~(b) Submit a written request for a review of the departmental denial within 120 days from the date the local board of health receives the written reasons for the denial.~~

~~(9) Upon receipt of written request for review of the departmental denial, the department shall:~~

~~(a) Acknowledge the receipt of the request in writing; and~~

~~(b) Form a mutually acceptable advisory panel consisting of:~~

~~(i) One departmental employee;~~

~~(ii) One employee from a local health jurisdiction other than that which requested the review; and~~

~~(iii) One member of the technical advisory committee.~~

~~(10) If good faith efforts to reach agreement are unsuccessful, the local board of health may appeal the denial to the Washington State Board of Health for resolution.~~

~~(11) Nothing in this chapter shall prohibit the adoption and enforcement of more stringent regulations by local health departments.~~

DRAFT

~~(12) In the plan required in subsection (1) of this section and in local regulations, the health officer may address water conservation and include options for the nonpotable reuse of gray water. Any treatment and dispersal of gray water outside the residence or structure must comply with this chapter. [Ord. H.Ord.061107 §1, 2007]~~

**Article II. General Requirements**

**8.40.060 Applicability.**

(1) The health officer:

(a) Shall apply this chapter to OSS treating sewage and dispersing effluent from residential sources with design flows up to 3,500 gallons per day;

(b) May apply this chapter to OSS for nonresidential sources of sewage if treatment, siting, design, installation, and operation and maintenance measures provide treatment and effluent dispersal equal to that required of residential sources;

(c) May not apply this chapter to industrial wastewater.

(2) A valid sewage system design approval or installation permit issued prior to the effective date of these regulations:

(a) Shall be acted upon in accordance with regulations in force at the time of issuance;

(b) Shall have a maximum validity period of two years from the date of issuance or remain valid for an additional year beyond the effective date of these regulations, whichever assures the most lenient expiration date; and

(c) May be modified to include additional requirements if the health officer determines that a serious threat to public health exists.

(3) This chapter does not apply to facilities regulated as reclaimed water use under Chapter 90.46 RCW. ~~[Ord. H.Ord.061107 §1, 2007]~~

**8.40.065 Special applicability to marijuana businesses.**

(1) When considering whether this chapter may be applied to new, repaired, replaced, or existing OSS for residential or nonresidential sources of sewage consisting at least in part of marijuana wastes regulated by Chapter 314-55 WAC, now or as hereafter amended or supplemented, the health officer shall determine whether the treatment, siting, design, installation, operation, and maintenance measures necessary for public health are comparable to those to which this chapter are applied for non-marijuana wastes. The determination may include testing of the inflow or outflow, inspection, and/or other

DRAFT

measures designed to determine whether the presence of marijuana wastes should be regulated under this chapter versus as industrial wastewater.

(2) If the health officer determines that OSS subject to subsection (1) of this section is comparable to OSS for nonmarijuana waste regulated under this chapter, this chapter shall apply in the same manner as it does to OSS for nonmarijuana waste, except where marijuana-specific environmental or regulatory factors dictate otherwise.

(3) If the health officer determines that OSS subject to subsection (1) of this section is not comparable to OSS for nonmarijuana waste regulated under this chapter, this chapter shall not apply. Rather, the rules governing underground injection control wells from Chapter 173-218 WAC, now or as hereafter amended, shall apply, and dangerous waste regulations under Chapter 173-303 WAC may also apply. For such OSS, the Washington Department of Ecology shall enforce the applicable regulations. If the Washington Department of Ecology determines that the OSS is exempt from its regulations, however, this chapter shall apply.

(4) The manner in which OSS are to be utilized for residential or nonresidential sources of sewage consisting at least in part of marijuana wastes regulated by Chapter 314-55 WAC, now or as hereafter amended or supplemented, shall be conformed to this chapter in the approved operating plan required by LCC 5.20.030 or separately if no approved operating plan is required. For OSS under subsection (3) of this section, the health officer shall notify the Washington Department of Ecology to enable it to approve or disapprove of any OSS specified or required in the operating plan. ~~[Ord. 1271 §3, 2017]~~

**8.40.070 Connection to public sewer system.**

(1) Upon the failure of an existing OSS within the service area of a sewer utility, the local health officer shall:

(a) Permit the repair or replacement of the OSS only if a conforming OSS can be designated and installed, excluding OSS designed in compliance with or proposing to use Table X in WAC 246-272A-0280; or

(b) Require connection to public sewer system if the sewer utility allows the connection and has ~~When~~ adequate public sewer services ~~are~~ available within ~~200 feet of the residence or facility, the health officer, upon the failure of an existing on-site sewage system, may~~:

~~(a) Require hook-up to a public sewer system; or~~

DRAFT

~~(b) Permit the repair or replacement of the on-site sewage system only if a conforming system can be designed and installed.~~

~~(2) Except as noted in subsection (1) of this section, the owner of a failure shall abandon the OSS under WAC 246-272A-0300 and connect the residence or other facility to a public sewer system when:~~

~~(a) The distance between the residence or other facility and an adequate public sewer is 200 feet or less as measured along the usual or most feasible route of access; and~~

~~(b) The sewer utility allows the sewer connection.~~

~~(3)~~ 200 feet from where the existing building drain connects to the existing building sewer, or where no building drain exists, within 200 feet from where the sewer line begins, as measured along the usual or most feasible route of access.

(2) The owner of a structure ~~residence or other facility~~ served ~~by a system meeting the requirements of Table IX of this chapter~~ an OSS permitted as a repair under Table X in WAC 246-272A-280 shall abandon the OSS ~~according to the requirements~~ as specified in WAC 246-272A-0300, and connect the ~~residence or other facility~~ structure to a public sewer system when:

(a) Connection is deemed necessary to protect public health by the health officer;

(b) An adequate public sewer becomes available within 200 feet of the ~~residence or other facility~~ existing structure, or in cases where no building drain exists, within 200 feet from where the sewer for the building begins, as measured along the usual or most economically feasible route of access; and

(c) The sewer utility allows the sewer connection.

(~~4~~ 3) Local boards of health may require a new development to connect to a public sewer system to protect public health.

(~~5~~ 4) Local boards of health shall require new development or a development with a failing ~~system~~ OSS to connect to a public sewer system if it is required by the comprehensive land use plan or development regulations. ~~[Ord. II.Ord.061107 §1, 2007]~~

**Article III. Sewage Products and Technologies**

**8.40.080 Sewage technologies.**

WAC 246-272A-0100, regarding the development of recommended standards and guidance by the State Department of Health for sewage technologies, is adopted by reference, including Tables I, II, and III, shown in this section.

DRAFT

**TABLE I**

**Testing Requirements for Proprietary Products**

| **Treatment Component/Sequence Category** | **Required Testing Protocol** |
|---|---|
| **Category 1** Designed to treat ~~sewage with strength typical of a residential source when~~ septic tank effluent ~~is~~ anticipated to be equal to or less than treatment level E. | ~~ANSI/NSF~~ NSF/ANSI40 - Residential Wastewater Treatment Systems (~~protocols dated between July 1996 and the effective date of these rules~~ versions dated between January 2009 and May 31, 2021). |
| **Category 2** Designed to treat ~~high-strength sewage when septic tank~~ effluent ~~is~~ or sewage quality parameters anticipated to be greater than treatment level E (such as at restaurants, grocery stores, mini-marts, group homes medical clinics, residences, etc.). | ~~EPA/NSF Protocol for the Verification of Wastewater Technologies/EPA Environmental Technology Verification (April 2001).~~ EPA method 1664, Revision B (February 2010) |
| **Category 3** Black water component of residential sewage (such as composting and incinerating toilets). | NSF/ANSI ~~Standard~~ 41: Non-Liquid Saturated Treatment Systems Versions dated between February 2011 and May 31, 2021 ~~(September 1999)~~<br><br>**NSF Protocol P157 Electrical Incinerating Toilets - Health and Sanitation (April 2000). |
| **Total Nitrogen Reduction in Categories 1 and 2 (above).** | ~~Protocol for the Verfication of Residential Wastewater Treatment Technologies for Nutrient Reduction/EPA Environmental Technology Verification Program (November, 2000).~~ NSF?ANSI 245: Residential Wastewater Treatment Systems – Nitrogen Reduction (Versions dated between January 2018 and May 31, 2021) |

**TABLE II**

**Test Results Reporting Requirements for Proprietary Treatment Products**

| **Treatment Component/Sequence Category** | **Testing Results Reported** |
|---|---|
| **Category 1** Designed to treat ~~sewage with strength typical of a residential source when~~ septic tank effluent ~~is~~ anticipated to be equal to or less than treatment level E. | Report test results of influent and effluent sampling obtained throughout the testing period for evaluation of ~~constituent~~ reduction of ~~for the parameters:~~ $CBOD_5$~~[1]~~ and TSS~~.~~:<br><br>• Average • Standard Deviation<br><br>• Minimum • Maximum<br><br>• Median • Interquartile Range<br><br>• 30-day Average (for each month)<br><br>For evaluation of bacteriological reduction performance~~,~~. Report complete treatment component sequence testing as described in Table III, Category I. For evaluation of performance meeting treatment level BL1:<br><br>(1) R ~~r~~eport fecal coliform test results of influent and effluent sampling by geometric mean from samples drawn within 30-day or monthly calendar periods, obtained from a minimum of three samples per week ~~thoughout~~ throughout the testing period. See WAC 246-272A-0130.<br>(2) Report complete testing results for supplemental bacteriological reduction technology[1] when the required treatment levels for fecal coliform in table III, Category I are not met by the primary proprietary treatment product.<br>For evaluation of performance meeting treatment level BL2 or BL3; |

~~[1] Test results for BOD5 may be submitted in lieu of test results for CBOD5 In these cases numerical values for CBOD5 will be determined using the following formula (BOD5 x 0.83 = CBOD5)~~

**TABLE II**

**Test Results Reporting Requirements for Proprietary Treatment Products**

| **Treatment Component/Sequence Category** | **Testing Results Reported** |
|---|---|
| | (1) Report fecal coliform test results of influent and effluent sampling by geometric mean from samples drawn within 30-day or monthly calendar periods, obtained from a minimum of three samples per week throughout the testing period as described in WAC 246-272A-130; or<br>(2) Report complete testing results for supplemental bacteriological reduction techlology[1] when the required treatment levels for fecal coliform in Table III, Category I are not met by the primary proprietary treatment product.<br>For all options,~~T~~test report must also include the individual results of all samples drawn throughout the test period. |
| **Category 2** Designed to treat ~~high-strength sewage when septic tank effluent is~~ effluent or sewage with sewage quality parameters anticipated to be greater than treatment level E (such as at restaurants, grocery stores, mini-marts, group homes medical clinics, atypical residences, etc.). | Report all individual test results and full test average values of influent and effluent sampling obtained throughout the testing period for the evaluation of reduction of: $CBOD_5$, TSS and O&G. Establish the treatment capacity of the product tests in pounds per day for $CBOD_5$. |
| **Category 3** Black water component of residential sewage (such as composting and incinerating toilets). | Report test results on all required performance criteria according to the format prescribed in the NSF test protocol described in Table I. |

**TABLE II**

**Test Results Reporting Requirements for Proprietary Treatment Products**

| **Treatment Component/Sequence Category** | **Testing Results Reported** |
|---|---|
| **Total Nitrogen Reductions in Categories 1 and 2 (above).** | Report test results on all required performance criteria according to the format prescribed in the NSF test protocol described in Table I. |

[1] Supplemental bacteriological reduction technology must be tested for influent/effluent fecal coliform or E. coli per WAC 246-272A-0130 (bacteriological reduction testing protocol). Supplemental fecal coliform or E. Coli reducing technologies will be rated for log base 10 removal of fecal coliform or E. coli. The lowest 30-day geometric mean will be used to rate reduction level. The highest monthly geometric mean for treatment technology fecal coliform or E. coli reduction will be used as the baseline value for review.

[2]Test results for BOD5 may be submitted in lieu of test results for CBOD5 In these cases numerical values for CBOD5 will be determined using the following formula (BOD5 x 0.83 = CBOD5)

**TABLE III**

**Product Performance Requirements for Proprietary Treatment Products**

| ~~**Treatment Component/Sequence Category**~~ | ~~**Product Performance Requirements**~~ | | | | | |
|---|---|---|---|---|---|---|
| ~~**Category 1** Designed to treat sewage with strength typical of a residential source when septic tank effluent is anticipated to be equal to or less than treatment level E.~~ | ~~Treatment System Performance Testing Levels~~ | | | | | |
| | ~~Level~~ | ~~Parameters~~ | | | | |
| | ~~-~~ | ~~$CBOD_5$ (mg/L)~~ | ~~TSS (mg/L)~~ | ~~O&G (mg/L)~~ | ~~FC (#/100 ml)~~ | ~~TN (mg/L)~~ |
| | ~~A~~ | ~~10~~ | ~~10~~ | ~~----~~ | ~~200~~ | ~~----~~ |

[1] Supplemental bacteriological reduction technology must be tested for influent/effluent fecal coliform or E. coli per WAC 246-272A-0130 (bacteriological reduction testing protocol). Supplemental fecal coliform or E. Coli reducing technologies will be rated for log base 10 removal of fecal coliform or E. coli. The lowest 30-day geometric mean will be used to rate reduction level. The highest monthly geometric mean for treatment technology fecal coliform or E. coli reduction will be used as the baseline value for review.

[2]Test results for BOD5 may be submitted in lieu of test results for CBOD5 In these cases numerical values for CBOD5 will be determined using the following formula (BOD5 x 0.83 = CBOD5)

**TABLE III**

**Product Performance Requirements for Proprietary Treatment Products**

| ~~**Treatment Component/Sequence Category**~~ | ~~**Product Performance Requirements**~~ | | | | | |
|---|---|---|---|---|---|---|
| | ~~B~~ | ~~15~~ | ~~15~~ | ~~----~~ | ~~1,000~~ | ~~----~~ |
| | ~~C~~ | ~~25~~ | ~~30~~ | ~~----~~ | ~~50,000~~ | ~~----~~ |
| | ~~D~~ | ~~25~~ | ~~30~~ | ~~----~~ | ~~----~~ | ~~----~~ |
| | ~~E~~ | ~~125~~ | ~~80~~ | ~~20~~ | ~~----~~ | ~~----~~ |
| | ~~N~~ | ~~----~~ | ~~----~~ | ~~----~~ | ~~----~~ | ~~20~~ |
| | ~~Values for levels A - D are 30-day values (averages for $CBOD_5$, TSS, and geometric mean for FC.) All 30-day averages throughout the test period must meet these values in order to be registered at these levels.~~<br><br>~~Values for Levels E and N are derived from full test averages.~~ | | | | | |
| ~~**Category 2** Designed to treat high-strength sewage when septic tank effluent is~~ | ~~All of the following requirements must be met:~~<br><br>~~(1) All full test averages must meet Level E; and~~ | | | | | |

[1] Supplemental bacteriological reduction technology must be tested for influent/effluent fecal coliform or E. coli per WAC 246-272A-0130 (bacteriological reduction testing protocol). Supplemental fecal coliform or E. Coli reducing technologies will be rated for log base 10 removal of fecal coliform or E. coli. The lowest 30-day geometric mean will be used to rate reduction level. The highest monthly geometric mean for treatment technology fecal coliform or E. coli reduction will be used as the baseline value for review.
[2]Test results for BOD5 may be submitted in lieu of test results for CBOD5 In these cases numerical values for CBOD5 will be determined using the following formula (BOD5 x 0.83 = CBOD5)

**TABLE III**

**Product Performance Requirements for Proprietary Treatment Products**

| ~~**Treatment Component/Sequence Category**~~ | ~~**Product Performance Requirements**~~ |
|---|---|
| ~~anticipated to be greater than treatment level E (such as at restaurants, grocery stores, mini-marts, group homes medical clinics, residences, etc.).~~ | ~~(2) Establish the treatment capacity of the product tested in pounds per day for $CBOD_5$.~~ |
| ~~**Category 3** Black water component of residential sewage (such as composting and incinerating toilets).~~ | ~~Test results must meet the performance requirements established in the NSF test protocol.~~ |
| ~~**Total Nitrogen Reductions in Categories 1 and 2 (above)**~~ | ~~Test results must establish product performance effluent quality meeting Level N, when presented as the full test average.~~ |

Table III

| Product Performance Requirements for Proprietary Treatment Products |
|---|

| Treatment Component/Sequence Category | Product Performance Requirements | | | | | | |
|---|---|---|---|---|---|---|---|
| **Category 1** Designed to treat effluent anticipated to be equal to or less than treatment level E | Treatment System Performance Testing Levels | | | | | | |
| | Level | Parameters | | | | | |
| | | CBOD5 mg/L | TSS mg/L | O&G mg/L | FC cfu/100 mL | TN mg/L | E. coli cfu/100 mL |
| | A | 10 | 10 | - | - | - | - |
| | B | 15 | 15 | - | - | - | - |
| | C | 25 | 30 | - | - | - | - |
| | BL1 | - | - | - | 200 | - | 126 |
| | BL2 | - | - | - | 1,000 | - | - |
| | BL3 | - | - | - | 50,000 | - | - |
| | E | 228 | 80 | 20 | - | - | - |
| | N | - | - | - | - | 30 (or 50% reduction based on mass loading as required in WAC | - |

DRAFT

| | | | | | | | |
|---|---|---|---|---|---|---|---|
| | | | | | | 246-272A-0320) | |
| | Values for Levels A-C are 30-day values (averages for CBOD5, TSS, and geometric mean for FC.) All 30-day averages throughout the test period must meet these values in order to be registered at these levels.<br><br>Values for levels E and N are derived from full test averages. | | | | | | |
| **Category 2** Designed to treat high-strength sewage when septic tank effluent is anticipated to be greater than treatment level E.<br><br>(Such as at restaurants, grocery stores, mini-marts, group homes, medical clinics, residences, etc.) | All of the following requirements must be met:<br><br>(1) All full test averages must meet Level E; and<br>(2) Establish the treatment capacity of the product tested in pounds per day for CBOD5. | | | | | | |
| **Category 3** Black water component of residential sewage (suck as composting and incinerating toilets) | Test results must meet the performance requirements established in the NSF test protocol. | | | | | | |
| **Total Nitrogen Reduction in Categories 1 & 2 (above)** | Test results must establish product performance effluent quality meeting Level N, when presented as the full test average. | | | | | | |

~~[Ord. H.Ord.061107 §1, 2007]~~

**8.40.085 Proprietary treatment products - Certification and registration.**

DRAFT

WAC 246-272A-0110, regarding the certification and registration of proprietary treatment products by the State Department of Health for sewage technologies, is adopted by reference. ~~[Ord. H.Ord.061107 §1, 2007]~~

**8.40.090 Proprietary treatment product registration - Process and requirements.**

WAC 246-272A-0120, regarding the registration of proprietary treatment products by the State Department of Health for sewage technologies, is adopted by reference. ~~[Ord. H.Ord.061107 §1, 2007]~~

~~**8.40.095 Transition from the list of approved systems and products to the registered list - Treatment products.**~~

~~WAC 246-272A-0125, regarding transitioning from the list of approved systems and products to the registered list in WAC 246-272A-0120, is adopted by reference. [Ord. H.Ord.061107 §1, 2007]~~

**8.40.100 Bacteriological reduction.**

WAC 246-272A-0130, regarding requirements for registering bacteriological reduction processes with the State Department of Health, is adopted by reference. ~~[Ord. H.Ord.061107 §1, 2007]~~

~~**8.40.105 Transition from the list of approved systems and products to the registered list - Bacteriological reduction.**~~

~~WAC 246-272A-0135, regarding the regarding transitioning from the list of approved systems and products to the registered list in WAC 246-272A-0130, is adopted by reference. [Ord. H.Ord.061107 §1, 2007]~~

**8.40.110 Proprietary distribution products - Certification and registration.**

WAC 246-272A-0140, regarding certification and registration requirements for proprietary distribution products with the State Department of Health, is adopted by reference~~. [Ord. H.Ord.061107 §1, 2007]~~

**8.40.120 Proprietary distribution product registration - Process and requirements.**

WAC 246-272A-0145, regarding the process and requirements for certification and registration requirements of proprietary distribution products with the State Department of Health, is adopted by reference. ~~[Ord. H.Ord.061107 §1, 2007]~~

~~**8.40.125 Transition from the list of approved systems and products to the registered list - Distribution products.**~~

DRAFT

~~WAC 246-272A-0150, regarding transitioning from the list of approved distribution products to the registered list in WAC 246-272A-0145, is adopted by reference. [Ord. II.Ord.061107 §1, 2007]~~

**8.40.130 Product development permits.**

(1) The health officer may issue a ~~product development permit (PDP)~~ PDP for any proprietary treatment component or sequence to be used during a development period. ~~In order to~~ To protect public health during the development period, a complete ~~system~~ OSS meeting the requirements of this chapter and the site must already be installed. The ~~product~~ component or sequence under development may then be added to the treatment system, allowing the ~~product~~ developer to gather data about the product's performance in the field. The PDP allows ~~product~~ developers to explore ~~and develop~~ new technologies prior to product testing and registration under WAC 246-272A-0110 and 246-272A-0120. The PDP is not an alternative to testing and registration.

(2) An ~~application~~ applicant for a PDP ~~shall include~~ must submit an application to the local health officer including all of the following:

(a) Proof of an existing conforming ~~system~~ OSS in compliance with all local requirements, or a permit for a conforming ~~system~~ OSS. The conforming ~~system~~ OSS must be installed in its entirety before the PDP becomes valid;

(b) A description of the product under development including performance goals and a description of how the system will be used to treat sewage;

(c) ~~Documentation of f~~ Financial assurance ~~that will cover~~ covering the correction of any potential public health threats or environmental damage resulting from the use of the product under development. Instruments of financial assurance include:

(i) An irrevocable letter of credit in the amount required by the health officer issued by an entity authorized to issue letters of credit in Washington state;

(ii) Cash or security deposit payable to the local health jurisdiction in the amount required by the health officer; or

(iii) Any other financial assurance that satisfies the health officer.

(d) Documentation signed by the owner of the proposed product development site allowing access to the health officer for inspection of the site; and

(e) Any other information required by the health officer.

DRAFT

(3) The health officer may ~~stipulate~~ impose additional requirements for a PDP necessary to ~~assure~~ safeguard the performance of the conforming ~~system~~ OSS, including providing performance data to the health officer.

(4) A PDP is a site-specific permit. Product development at multiple sites requires a PDP for each site.

(5) During the term of the PDP, product development, testing and sampling are under the full control of the product developer and all data collected is considered proprietary information.

(6) A PDP is valid for one year and may be renewed by the health officer.

(7) The product development period is over when the original PDP or any subsequently renewed permits have expired. At this time the product developer:

(a) Shall, at the direction of the health officer, remove the product under development from the site, reestablishing all appropriate plumbing and power connections for the conforming ~~system~~ OSS.

(b) May subject the product to performance testing described in WAC 246-272A-0110 ~~in order~~ to allow the product to be eligible for registration with the department.

(8) The health officer may revoke or amend a PDP:

(a) If the continued operation or presence of the product under development:

(i) Presents a risk to ~~the~~ public health or the environment;

(ii) Causes adverse effects on the proper function of the conforming ~~system~~ OSS on the site; or

(iii) Leaks or discharges sewage on the surface of the ground.

(b) If the developer fails to comply with any requirements stipulated on the permit by the health officer.

(9) The health officer may charge fees adequate to administer the PDP program. ~~[Ord. H.Ord.061107 §1, 2007]~~

**~~8.40.135 Transition from the experimental system program to application for product registration.~~**

~~(1) The department's list of approved systems and products shall:~~

DRAFT

~~(a) Become static on September 15, 2005. Subsequent changes, additions or deletions to the list of approved systems and products will only be made when approved by the department based on completed applications received prior to September 15, 2005.~~

~~(b) Remain in effect until March 15, 2007.~~

~~(2) Persons representing experimental systems not on the department's list of approved systems and products on September 15, 2005, and not otherwise eligible for inclusion on the list by submittal of a completed application prior to September 15, 2005, may apply to the health officer for a product development permit under WAC 246-272A-0170.~~

~~(3) Those persons representing experimental systems on the department's list of approved systems and products on September 15, 2005, may continue with the experimental testing according to the experimental testing protocol agreed to by the department until completed. Upon completion of the testing, the person may apply to the department for product registration under WAC 246-272A-0120 or 246-272A-0145. In considering the results of the experimental testing protocol, the department may seek a recommendation from the TAC. The department may determine:~~

~~(a) The product meets the requirements for registration and place it on the list of registered proprietary products; or~~

~~(b) The product does not meet the requirements for registration. Any further treatment product development and testing may continue under WAC 246-272A-0170, not under the department's previous experimental system program. The requirements of WAC 246-272A-0110, 246-272A-0130, or 246-272A-0140 apply to any further application for product registration. [Ord. H.Ord.061107 §1, 2007]~~

**Article IV. Specific Requirements**

**8.40.140 Permit requirements.**

(1) ~~Prior to beginning the construction process,~~ A permit is not required for a minor repair. The local health officer may require the owner to submit information regarding any activities defined as a minor repair for record-keeping purposes.

(2) Except for a minor repair a person proposing the installation, repair, modification, connection to, or expansion of an OSS shall ~~report the following~~ submit an application and obtain a permit from the health officer prior to beginning construction. The permit application must include the following:

(a) General information including:

DRAFT

(i) Name and address of the property owner and the applicant at the head of each page of the submission;

(ii) Parcel number and, if available, the address of the site;

(iii) Source of drinking water supply;

(iv) Identification if the property is within the boundaries of a recognized sewer utility;

(v) Size of the parcel;

(vi) Type of permit for which application is being made.~~, for~~ For example, new installation, repair, expansion, modification, or operational;

(vii) Source of sewage: ~~, for~~ For example, residence, restaurant, or other type of business;

(viii) Location of utilities;

(ix) Name of the site evaluator;

(x) Name, signature and stamp of the designer;

(xi) Date of application; and

(xii) Name and signature of the fee simple owner, the contract purchaser of the property or the owner's authorized agent.

(b) The soil and site evaluation as specified under WAC 246-272A-0220.

(c) A dimensioned site plan of the proposed initial ~~system~~ OSS, the reserve area and those areas immediately adjacent that contain characteristics impacting design including:

(i) Designated areas for the proposed initial ~~system~~ OSS and the reserve area;

(ii) The location of all soil logs and other soil tests for the OSS;

(iii) General topography and~~/or~~ slope;

(iv) Drainage characteristics;

(v) Horizontal separations as noted in Table IV in WAC 246-272A-0210;

(vi) The location of existing and proposed encumbrances affecting ~~system~~ OSS placement, including legal access documents if any component of the OSS is not on the lot where the sewage is generated; and

(vii) An arrow indicating north;.

(viii) A legend of symbols used;

DRAFT

(ix) Plan scale and a graphic scale bar;

(x) Vertical datum used (such as "assumed," "North American Vertical Datus of 1988 (NAVD 88)," "National Shoreline Reference Station (NSRS," or "unknown");

(xi) An elevation benchmark and relative elevations of system components;

(xii) Name, signature, stamp, and contact information of the designer; and

(xiii) A statement on limitation of use indicating the site plan is not a survey.

(d) A detailed ~~system~~ OSS design meeting the requirements under WAC 246-272A-0230, 246-272A-0232, 246-272A-0234, and 246-272A-0238 including:

(i) A drawing showing the dimensioned location of components of the proposed OSS, and the system designed for the reserve area if reserve site characteristics differ significantly from the initial area;

(ii) Vertical cross-section drawings showing:

(A) The depth of the soil dispersal component, the vertical separation, and depth of cover material; and

(B) Other new OSS components constructed at the site.

(iii) Calculations and assumptions supporting the proposed design, including:

(A) System operating capacity and design flow;

(B) Soil type; ~~and~~

(C) Hydraulic loading rate in the soil dispersal component; and

(iv) A statement indicating if there are wet weather or soil moisture restrictions and how they will be addressed.

(e) Any additional information as deemed necessary by the health officer.

~~(2) A permit is not required for replacement, addition, or modification of broken or malfunctioning building sewers, risers and lids, sewage tank lids, sewage tank baffles, sewage tank pumps, pump control floats, pipes connecting multiple sewage tanks, and OSS inspection boxes and ports where a sewage tank, treatment component, or soil dispersal component does not need to be replaced. The health officer may require the owner to submit information regarding these activities for recordkeeping purposes.~~

DRAFT

(3) The health officer may develop the information required in subsection (1) of this section if authorized by local ~~regulations~~ rules.

(4) The health officer shall:

(a) Respond to an application within 30 days as required in RCW 70.05.074.

(b) Permit only public domain treatment technologies that ~~have departmental RS&G~~ are described in this chapter or in a current DS&G.

(c) Permit only proprietary products that are registered by the department. ~~During the period of transition from the list of approved systems and products to the registered list, the health officer may permit products on the list of approved systems and products.~~

(~~c~~ d) Issue a permit when the information submitted under subsection (~~1~~ 2) of this section meets the requirements contained in this chapter and in local ~~regulations~~ rules;

(~~d~~ e) Identify the permit as a new installation, repair, expansion, modification, or operational permit;

(~~e~~ f) Specify the expiration date on the permit. Permits shall be valid for a period of two years from the date of original issue and may be extended for a period not to exceed one year. Incomplete applications or applications that have not resulted in permit issuance and are therefore considered inactive by the health officer shall expire one year from the date of application. Fees or partial fees for incomplete or expired permits shall not be refunded, unless the health officer determines there are mitigating circumstances;

(~~f~~ g) Include a reminder on the permit application of the applicant's right of appeal; and

(~~g~~ h) If requiring an operational permit, state the period of validity and the date and conditions of renewal including any required field compliance.

(5) The health officer may revoke or deny a permit for just cause. Examples include, but are not limited to:

(a) Construction or continued use of an OSS that threatens the public health;

(b) Misrepresentation or concealment of material fact in information submitted to the health officer; or

(c) ~~Failure to meet~~ Noncompliance with the conditions of the permit, this chapter or any local ~~regulations~~ rules.

(6) ~~Before the health officer issues a permit for the installation of an OSS to serve more than one development, the applicant shall show:~~

DRAFT

~~(a) An approved public entity owning or managing the OSS in perpetuity; or~~

~~(b) A management arrangement acceptable to the health officer, recorded in covenant, lasting until the on-site system is no longer needed, and containing, but not limited to:~~

~~(i) A recorded easement allowing access for construction, operation, monitoring maintenance, and repair of the OSS; and~~

~~(ii) Identification of an adequate financing mechanism to assure the funding of operation, maintenance, and repair of the OSS.~~ An applicant for a permit to install an OSS serving more than one development must submit an application that proves the OSS:

(a) Is owned or managed in perpetuity by a public entity;
(b) Is described in a separate writing including, but not limited to, an easement, covenant, contract, or other legal document authorizing access for construction, operation maintenance, and repair; and
(c) If owned privately, is adequately financed.

(7) The health officer shall not delegate the authority to issue permits.

(8) The health officer may stipulate additional requirements for a particular permit if necessary ~~for~~ to protect public health ~~protection~~. ~~[Ord. H.Ord.061107 §1, 2007]~~

**8.40.150 Location.**

(1) ~~Persons shall design and install~~ OSS must be designed and installed to meet at least the minimum horizontal separations shown in Table IV~~, Minimum Horizontal Separations~~:

(2) ~~If any condition indicates~~ When conditions indicate a greater potential for contamination or pollution, the health officer may increase the minimum horizontal separations. Examples of such conditions include, but are not limited to, excessively permeable soils, unconfined aquifers, shallow or saturated soils, dug wells, and improperly abandoned wells.

(3) The health officer may allow a reduced horizontal separation to not less than two feet from where the property line, easement line~~, in-ground swimming pool,~~ or building foundation is up-gradient.

(4) The local health officer may require an applicant to demonstrate the OSS meets (a), (b), or (c) of this subsection when determining if a horizontal separation to a minimum of 75 feet between an OSS dispersal component and ~~an individual~~ a water well, ~~individual~~ spring, or surface water that is not a public water ~~source can be reduced to a minimum of 75 feet, by the health officer, and be described as a conforming system upon signed approval by the health officer if the applicant demonstrates~~ is allowed:

DRAFT

(a) Adequate protective site-specific conditions, such as physical settings with low ~~hydro-geologic~~ hydrogeologic susceptibility from contaminant infiltration. Examples of such conditions include evidence of confining layers, an aquitard that separates ~~and/or aquatards separating~~ potable water from the OSS treatment zone, excessive depth to ground water, down-gradient contaminant source, or outside the zone of influence; or

**TABLE IV**

**MINIMUM HORIZONTAL SEPARATIONS**

| **Items requiring setback** | **From edge of soil dispersal component and reserve area** | **From sewage tank and distribution box** | **From building sewer and non-perforated distribution pipe** |
|---|---|---|---|
| Well ~~or suction line~~ | 100 ft. | 50 ft. | 50 ft. |
| Public drinking water well | 100 ft. | 100 ft. | 100 ft. |
| Nonpublic drinking water well | 100 ft. | 50 ft. | 50 ft. |
| Public drinking water spring or surface water measured from the ordinary high-water mark | 200 ft. | 200 ft. | 100 ft. |
| Nonpublic drinking water ~~Spring~~ or surface water ~~used as drinking water source~~ measured from the ordinary high-water mark[1] | 100 ft. | 50 ft. | 50 ft. |
| Nonpublic, in-ground, drinking water containment vessel[3] | 20 ft. | 10 ft. | 10 ft. |
| Pressurized water supply line or easement for water supply line | 10 ft. | 10 ft. | 10 ft. |
| Closed geothermal Loop[4] or pressurized nonpotable water line | 10 ft. | 10 ft. | 10 ft. |

**TABLE IV**

**MINIMUM HORIZONTAL SEPARATIONS**

| **Items requiring setback** | **From edge of soil dispersal component and reserve area** | **From sewage tank and distribution box** | **From building sewer and non-perforated distribution pipe** |
|---|---|---|---|
| Decommissioned well (decommissioned in accordance with Chapter 173-160 WAC) | 10 ft. | N/A | N/A |
| Surface water measured from the ordinary high-water mark | 100 ft. | 50 ft. | 10 ft. |
| Building foundation/in-ground swimming pool | 10 ft. | 5 ft. | 2 ft. |
| Property or easement line | 5 ft. | 5 ft. | N/A |
| Lined[2] stormwater detention pond[3] | | | |
| Down-gradient[4] | 30 ft. | N/A | N/A |
| Up-gradient | 10 ft. | N/A | N/A |
| Unlined stormwater infiltration pond (up or down-gradient) | 100 ft. | 50 ft. | 10 ft |
| Irrigation canal or irrigation pond (up or down-gradient) | 100 ft. | 50 ft | 10 ft. |

[2] Lined means any component that has the intended function of detaining the stormwater with no intention of dispersal into surrounding soil

[3] OSS components take precedence in cases of horizontal setback conflicts between OSS and stormwater components

[4] Down-gradient means that subsurface water flows toward and is usually located lower in elevation. Up-gradient means subsurface water does not flow toward and generally flat, or flows away from and generally located higher in elevation

**TABLE IV**

**MINIMUM HORIZONTAL SEPARATIONS**

| **Items requiring setback** | **From edge of soil dispersal component and reserve area** | **From sewage tank and distribution box** | **From building sewer and non-perforated distribution pipe** |
|---|---|---|---|
| Interceptor/curtain drains/foundation drains/drainage ditches | | | |
| Down-gradient [2] | 30 ft. | 5 ft. | N/A |
| Up-gradient [2] | 10 ft. | N/A | N/A |
| Subsurface stormwater infiltration or dispersion component | | | |
| Down-gradient | 30 ft. | 10 ft. | N/A |
| Up-gradient | 30 ft. | 10 ft. | N/A |
| Other site features that may allow effluent to surface | | | |
| Down-gradient [2] | 30 ft. | 5 ft. | N/A |
| Up-gradient [2] | 10 ft. | N/A | N/A |
| Down-gradient cuts or banks with at least 5 ft. of original, undisturbed soil above a restrictive layer due to a structural or textural change | 25 ft. | N/A | N/A |
| Down-gradient cuts or banks with less than 5 ft. of original, undisturbed, soil above a restrictive layer due to a structural or textural change | 50 ft. | N/A | N/A |

**TABLE IV**

**MINIMUM HORIZONTAL SEPARATIONS**

| **Items requiring setback** | **From edge of soil dispersal component and reserve area** | **From sewage tank and distribution box** | **From building sewer and non-perforated distribution pipe** |
|---|---|---|---|
| ~~Other adjacent soil~~ Soil dispersal components~~/subsurface stormwater infiltration systems~~ serving a separate OSS | 10 ft. | N/A | N/A |

[1]If the surface water is used as a public drinking water supply~~,~~; the designer shall locate the OSS outside of the required source water protection area.

[2]The item is down-gradient when liquid will flow toward it upon encountering a water table or a restrictive layer. The item is up-gradient when liquid will flow away from it upon encountering a water table or restrictive layer.

(b) Design and proper operation of an OSS with ~~system assuring~~ enhanced treatment performance beyond that accomplished by meeting the vertical separation and effluent distribution requirements described in Table VI and WAC 246-272A-0230~~, Table VI~~; or

(c) Evidence ~~of protective conditions involving both~~ the OSS satisfies the requirements of subsections (4)(a) and (b) of this section.

(5) Persons shall design ~~and/~~or install a soil dispersal component only if:

(a) The slope is less than 45 percent (24 degrees);

(b) The area is not subject to:

(i) Encroachment by buildings or construction such as placement of power poles and underground utilities;

(ii) Cover by impervious material;

(iii) Vehicular traffic; or

(iv) Other activities adversely affecting the soil or the performance of the OSS.

DRAFT

(c) Sufficient reserve area for replacement exists to treat and dispose 100 percent of the design flow;

(d) The land is stable; and

(e) Surface drainage is directed away from the site.

(6) The health officer may approve a sewer transport line within 10 feet of a water supply line if the sewer line is constructed in accordance with section C1-9.1 of the Department of Ecology's "Criteria ~~For~~ for Sewage Works Design," December ~~1998~~ 2008. ~~[Ord. H.Ord.061107 §1, 2007]~~

**8.40.160 Soil and site evaluation.**

(1) Only professional engineers, designers, or the health officer may perform soil and site evaluations. Soil scientists may only perform soil evaluations.

(2) The person evaluating the soil and site shall:

(a) Report:

(i) A sufficient number of soil logs to evaluate conditions within:

(A) The initial soil dispersal component; and

(B) The reserve area.

(ii) The ground water conditions, the date of the observation, and the probable maximum height;

(iii) The topography of the proposed initial OSS ~~system~~, the reserve area, and those areas immediately adjacent that contain characteristics impacting the design;

(iv) The drainage characteristics of the proposed initial OSS ~~system~~, the reserve area and those areas immediately adjacent that contain characteristics impacting the design;

(v) The existence of structurally deficient soils subject to major wind or water erosion events such as slide zones and dunes;

(vi) The existence of designated flood plains;

(vii) ~~and other~~ Other areas identified in the local management plan required in WAC 246-272A-0015; ~~and~~

(viii) The location of existing features affecting OSS ~~system~~ placement, such as, but not limited to:

DRAFT

(A) Wells ~~and suction lines~~;

(B) Water sources and supply lines;

(C) Surface water and stormwater infiltration areas;

(D) Abandoned wells;

(E) Outcrops of bedrock and restrictive layers;

(F) Buildings;

(G) Property lines and lines of easement;

(H) Interceptors such as footing drains, curtain drains, and drainage ditches;

(I) Cuts, banks, and fills;

(J) Driveways and parking areas;

(K) Existing OSS; and

(L) Underground utilities;

(b) Use the soil and site evaluation procedures and terminology in accordance with Chapter 5 of the On-site Wastewater Treatment Systems Manual, EPA 625/R-00/008, February 2002, except where modified by, or in conflict with, this chapter ~~(available upon request to the department);~~

(c) Use the soil names and particle size limits of the United States Department of Agriculture Natural Resources Conservation Service classification system;

(d) Determine texture, structure, compaction and other soil characteristics that affect the treatment and water movement potential of the soil by using normal field ~~and/~~or laboratory procedures such as particle size analysis; and

(e) Classify the soil as in Table V~~, Soil Type Descriptions~~.

(3) The owner of the property or ~~his~~ the owner's agent shall:

(a) Prepare the soil log excavation to:

(i) Allow examination of the soil profile in its original position by:

(A) Excavating pits of sufficient dimensions to enable observation of soil characteristics by visual and tactile means to a depth three feet deeper than the anticipated infiltrative surface at the bottom of the soil dispersal component; or

DRAFT

(B) Stopping at a shallower depth if a water table or restrictive layer is encountered;

(ii) Allow determination of the soil's texture, structure, color, bulk density or compaction, water absorption capabilities or permeability, and elevation of the highest seasonal water table; and

(b) Assume responsibility for constructing and maintaining the soil log excavation in a manner to prevent injury as required by Chapter 296-155 WAC.

**TABLE V**

**SOIL TYPE DESCRIPTIONS**

| **Soil Type** | **Soil Textural Classifications** |
|---|---|
| 1 | Gravelly and very gravelly coarse sands, all extremely gravelly soils excluding those with soil types 5 and 6 as the nongravel portion, and all soil types with greater than or equal to 90% rock fragments. |
| 2 | Coarse sands. |
| 3 | Medium sands, loamy coarse sands, loamy medium sands. |
| 4 | Fine sands, loamy fine sands, sandy loams, loams. |
| 5 | Very fine sands, loamy very fine sands; or silt loams, sandy clay loams, clay loams and silty clay loams with a moderate or strong ~~stucture~~ structure (excluding a platy structure). |
| 6 | Other silt loams, sandy clay loams, clay loams, silty clay loams. |
| 7<br><br>Unsuitable for treatment or disposal | Sandy clay, clay, silty clay, strongly cemented or firm soils, soil with a moderate or strong platy structure, any soil with a massive structure, any soil with appreciable amounts of expanding clays. |

(4) The health officer:

(a) Shall render a decision on the height of the water table within 12 months of receiving the application under precipitation conditions typical for the region;

(b) May require water table measurements to be recorded during months of probable high-water table conditions, if insufficient information is available to determine the highest seasonal water table;

(c) May require any other soil and site information affecting location, design, or installation; ~~and~~

(d) May reduce the required number of soil logs for OSS serving a single-family residence if adequate soils information has previously been developed.

(e) May require another site and soil evaluation if the site has been altered since the initial site and soil evaluation was submitted to the local health officer. ~~[Ord. H.Ord.061107 §1, 2007]~~

**8.40.170 Design requirements - General.**

(1) ~~On-site sewage systems may~~ OSS must only be designed by professional engineer~~s~~, licensed under Chapter 18.43 RCW, or ~~on-site sewage treatment system~~ OSS designer~~s~~, licensed under Chapter 18.210 RCW~~, except~~:

~~(a) If, at the discretion of the health officer, a resident owner of a single-family residence, served by a standard septic tank and gravity SSAS, is allowed to design a system for that residence; or~~

~~(b) If the health officer performs the soil and site evaluation, the health officer is allowed to design a system.~~

(2) The designer shall use the following criteria when developing a design for an OSS:

(a) All sewage from the building served is directed to the OSS;

(b) Sewage tanks ~~have been reviewed and approved by the department~~ are in compliance with chapter 246-272C WAC;

(c) Drainage from the surface, footing drains, roof drains, subsurface stormwater infiltration systems, and other nonsewage drains is prevented from entering the OSS, the area where the OSS is located, and the reserve area;

(d) The OSS is designed to treat and disperse the sewage volume as follows:

(i) For single-family residences:

(A) The operating capacity is based on 45 gpd per capita with two people per bedroom.

DRAFT

(B) The minimum design flow per bedroom per day is the operating capacity of 90 gallons multiplied by 1.33 to account for a 33 percent surge capacity. This results in a minimum design flow of 120 gallons per bedroom per day.

(C) ~~A factor greater than 0.33 to account for surge capacity may be required by the~~ The health officer may require a factor greater than 33 percent to account for surge capacity;~~.~~

(D) The minimum design flow of the OSS is 240 gpd; and

(~~D~~E) The health officer may require an increase of the design flow for dwellings with anticipated greater flows, such as larger dwellings; or~~.~~

(i) For single-family residences with one additional dwelling served by the same OSS:

(A) All requirements in (d)(i) of this subsection apply;
(B) The minimum design flow for one additional dwelling is 120 gallons per bedroom; and
(C) The local health officer may require an increase of the design flow for dwellings with anticipated greater flows; or

(ii) For three or more dwellings served by the same OSS;

(A) All requirements in (d)(i) of this subsection apply;
(B) The minimum design flow for the first dwelling is 240 gallons per day;
(C) The minimum design flow for each additional dwelling is 120 gallons per bedroom;
(D) The local health officer may require an increase of the design flow for dwellings with anticipated greater flows; and
(E) The local health officer shall require documentation including, but not limited to, an easement, covenant, contract, or other legal, document authorizing access for construction, operation maintenance, and repair; or

~~(E) The minimum design flow is 240 gallons per day.~~

(iii) For other facilities, the design flows noted in "On-site Wastewater Treatment Systems Manual," USEPA, EPA-625/R-00/008, February ~~2002 (available upon request to the department) shall~~ must be used. Sewage flows from other sources of information may be used in determining system design flows if they incorporate both an operating capacity and a surge capacity.

(e) The OSS is designed to address sewage quality as follows:

DRAFT

(i) For all systems, the designer shall consider:

(A) $CBOD_5$, TSS, and O&G;

(B) Other parameters that can adversely affect treatment component anywhere along the treatment sequence. Examples include pH, temperature and dissolved oxygen;

(C) The sensitivity of the site where the OSS will be installed. Examples include areas where fecal coliform constituents can result in public health concerns, such as shellfish growing areas, designated swimming areas, and other areas identified by the local management plan required in WAC 246-272A-0015~~.~~; and

(D) Nitrogen Contributions. Where nitrogen has been identified as a contaminant of concern by the local management plan required in WAC 246-272A-0015, it ~~shall~~ must be addressed through lot size~~,~~ ~~and/or~~ treatment, or both.

(ii) For OSS treating sewage from a nonresidential source, the designer shall provide the following information showing:

(A) ~~Information to show the~~ The sewage is not industrial wastewater;

(B~~) Information regarding the~~ The sewage effluent quality and identifying chemicals found in the sewage ~~that~~ effluent are not found in sewage effluent from a residential source; and

(C) A site-specific design providing the necessary treatment ~~level equal to that required of~~ equaling required treatment of sewage effluent quality from a residential source;

(f) The vertical separation ~~to be~~ used to establish the treatment levels and application rates. The selected vertical separation ~~shall~~ must be used consistently throughout the design process~~.~~; and

(i) Trench depths ≤ 11": submit a topographical analysis demonstrating that the proposed trench depth is suitable for the site's conditions, accounting for slope and uneven topography. Designs that fail to account for topographical features may be rejected

(g) Treatment Levels.

(i) Requirements for matching treatment component and method of distribution with soil conditions of the soil dispersal component are listed in Table VI of this section. The treatment levels correspond with those established for treatment components under the product performance testing requirements in Table III of WAC 246-272A-0110. The method of distribution applies to the soil dispersal component.

DRAFT

**Table VI**

**Treatment Component Performance Levels and Method of Distribution[1]**

| **Vertical Separation in Inches** | **Soil Type** | | |
|---|---|---|---|
| | **1** | **2** | **3 - 6** |
| 12 < 18 | **A & BL1** - pressure with timed dosing | **B & BL2** - pressure with timed dosing | **B & BL2** - pressure with timed dosing |
| ≥ 18 < 24 | **B & BL2** - pressure with timed dosing | **~~B~~ C & BL3** - pressure with timed dosing | **~~B~~ C & BL3** - pressure with timed dosing |
| ≥ 24 < 36 | **B & BL2** - pressure with timed dosing | **C & BL3** - pressure | **E** - pressure |
| ≥ 36 < 60 | **B & BL2** - pressure with timed dosing | **E** - pressure | **E** - gravity |
| ≥ 60 | **C & BL2** - pressure | **E** - gravity | **E** - gravity |

[1]The treatment component performance levels correspond with those established for treatment components under the product testing requirements in WAC 246-272A-0110.

(ii) Disinfection may not be ~~used to achieve the fecal coliform requirements to meet~~:

(A) ~~Treatment levels A or B in Type 1 soils~~ To achieve BL1 or BL2 in type 1 soils; or

(B) ~~Treatment level C~~ BL3.

(3) The coarsest textured soil within the vertical separation selected by the designer ~~shall~~ determines the minimum treatment level and method of distribution.

(4) The health officer shall not approve designs for:

(a) Cesspools; or

(b) Seepage pits.

(5) The health officer may approve a design for the reserve area different from the design approved for the initial OSS, if both designs meet the requirements of this chapter for new construction. ~~[Ord. II.Ord.061107 §1, 2007]~~

DRAFT

**8.40.180 Design requirements - Septic tank sizing.**

Septic tanks ~~shall~~ must:

(1) Have at least two compartments with the first compartment liquid volume equal to one-half to two-thirds of the total liquid volume. This standard may be met by one tank with two compartments or by two single compartment tanks in series.

(2) Have the following minimum liquid volumes:

(a) For a single-family residence use Table VII~~, Required Minimum Liquid Volumes of Septic Tanks~~:

**TABLE VII**

**REQUIRED MINIMUM LIQUID VOLUMES OF SEPTIC TANKS**

| **Number of bedrooms** | **Required minimum liquid tank volume in gallons** |
|---|---|
| ~~≤ 3~~ | ~~900~~ |
| ≤4 | 1,000 |
| Each additional bedroom | 250 |

(b) For OSS treating sewage from a residential source, other than one single-family residence, 250 gallons per bedroom with a minimum of 1,000 gallons;

(c) For OSS treating sewage from a nonresidential source, three times the design flow.

(3) Comply with chapter 246-272C WAC. [Ord. H.Ord.061107 §1, 2007]

8.40.185 Design Requirements – Pump Chambers.

(1) All pump chambers, except pump basins, must be designed to meet the minimum requirements:

(a) Have a minimum volume of 1,000 gallons;

DRAFT

(b) Provide an internal volume to account for the design flow, full-time pump submergence, space for sludge accumulation below the pump inlet and emergency storage volume of at least 75 percent of the design flow;

(c) Follow any applicable DS&G or proprietary product design manual for all OSS components included in the pump chamber; and

(d) Comply with chapter 246-272C WAC.

(2) For the purposes of this section, "pump basin" means water-tight receptacle that contains a pump to convey sewage from a limited use area that is separate from the main wastewater sewer pipe leaving the structure, to the main chamber and separate from the main sewer pipe dure to elevation restrictions. Pump basins are located for limited, specialized uses, and not included as a replacement or substitute for a pump chamber. Pump basins must be in compliance with chapter 246-272C WAC.

**8.40.190 Design requirements - Soil dispersal components.**

(1) All soil dispersal components, except one using a subsurface dripline product, must ~~shall~~ be designed to meet the following requirements:

(a) Maximum hydraulic loading rates ~~shall be based on the rates~~ described in Table VIII;

(b) Calculation of the absorption area is based on:

(i) The design flow in WAC 246-272A-0230(2); and

(ii) Loading rates equal to or less than those in Table VIII of this section as applied to the infiltrative surface of the soil dispersal component or the finest textured soil within the vertical separation selected by the designer, whichever has the finest texture.

(c) Requirements for the method of distribution ~~shall~~ must correspond to those in WAC 246-272A-230, Table VI.

(d) Soil dispersal components having daily design flow between 1,000 and 3,500 gallons of sewage per day ~~shall~~ must:

(i) Only be located in soil types 1-5;

DRAFT

**TABLE VIII**

**MAXIMUM HYDRAULIC LOADING RATE**

| | | Column A | Column B |
|---|---|---|---|
| **Soil Type** | **Soil Textural Classification Description** | **Loading Rate for Residential Septic Tank Effluent Using Gravity or Pressure ~~Disributions~~ Distributions (gal./sq. ft./day)** | **Loading Rate for Residential Effluent Meeting Treatment Level C & BL3 or Higher Effluent Quality Using Pressure Distribution gal./sq. ft./day** |
| 1 | Gravelly and very gravelly coarse sands, all extremely gravelly soils excluding soil types 5 and 6, all soil types with greater than or equal to 90% rock fragments. | 1.0 | 1.2 |
| 2 | Coarse sands | 1.0 | 1.2 |
| 3 | Medium sands, loamy coarse sands, loamy medium sands. | 0.8 | 1.0 |
| 4 | Fine sands, loamy fine sands, sandy loams, loams. | 0.6 | 0.8 |
| 5 | Very fine sands, loamy very fine sands; or silt loams, sandy clay loams, clay loams and silty clay loams with a moderate or strong ~~stucture~~ structure (excluding a platy structure) | 0.4 | 0.56 |
| 6 | Other silt loams, sandy clay loams, clay loams, silty clay loams. | 0.2 | 0.2 |

**TABLE VIII**

**MAXIMUM HYDRAULIC LOADING RATE**

| | | Column A | Column B |
|---|---|---|---|
| **Soil Type** | **Soil Textural Classification Description** | **Loading Rate for Residential Septic Tank Effluent Using Gravity or Pressure ~~Disributions~~ Distributions (gal./sq. ft./day)** | **Loading Rate for Residential Effluent Meeting Treatment Level C & BL3 or Higher Effluent Quality Using Pressure Distribution gal./sq. ft./day** |
| 7 | Sandy clay, clay, silty clay, strongly cemented firm soils, soil with a moderate or strong platy structure, any soil with a massive structure, any soil with appreciable amounts of expanding clays. | ~~Not suitable~~ Unsuitable | Unsuitable |

(ii) Only be located on slopes of less than 30 percent, or 17 degrees; and

(iii) Have pressure distribution including time dosing.

(2) The local health officer may allow the maximum hydraulic loading rates in Table VIII of this section. Loading rates identified in Column B must not be combined with any dispersal component size reductions.

(3) All soil dispersal components using a subsurface dripline product must be designed to meet the following requirements:

(a) ~~Calculation of the~~ The absorption area calculation is based on:

(i) The design flow in WAC 246-272A-0230(2); and

(ii) Loading rates ~~that are~~ dependent on the soil type, other soil and site characteristics, and the spacing of dripline and emitters as directed in Table VIII of this section;

(b) ~~The dripline must be installed a~~ A minimum installation of six inches into original, undisturbed soil;

(c) Timed dosing; and

(d) ~~Soil dispersal components having daily~~ Daily design flows greater than 1,000 gallons of sewage per day ~~may~~:

(i) ~~Only be located~~ Located only in soil types 1 to 5;

(ii) ~~Only be located~~ Located only on slopes of less than 30 percent, or 17 degrees.

(~~3~~ 4) All SSAS ~~shall~~ must meet the following requirements:

(a) The infiltrative surface may not be deeper than three feet below the finished grade, except under special conditions approved by the health officer. The depth of such system ~~shall~~ must not exceed 10 feet from the finished grade;

(b) A minimum of six inches of sidewall must be located in ~~original undisturbed~~ suitable soil;

(c) Beds are only designed in soil types 1, 2, 3 or in fine sands with a width not exceeding 10 feet. Gravity beds must have a minimum of one lateral for every three feet in width;

(d) Individual laterals greater than 100 feet in length must use pressure distribution;

(e) A layer of between six and 24 inches of cover material; and

(f) Other features ~~shall~~ must conform with the "On-site Wastewater Treatment Systems Manual," United States Environmental Protection Agency, EPA-625/R-00/008, February 2002 ~~(available upon request to the department),~~ except where modified by or in conflict with this section or local ~~regulations~~ rules.

(~~4~~ 5) For SSAS with drainrock and distribution pipe must meet the following requirements:

(a) A minimum of two inches of drainrock ~~is required~~ above the distribution pipe;

(b) A minimum of six inches of drainrock below the distribution pipe; and

(c) Location of the ~~The~~ sidewall below the invert of the distribution pipe ~~is located~~ in original undisturbed soil.

(~~5~~ 6) The health officer may allow the infiltrative surface area in a SSAS to include six inches of the SSAS sidewall height when meeting the required absorption area where total recharge by annual precipitation and irrigation is less than 12 inches per year.

DRAFT

(~~6~~ 7) The health officer may permit ~~systems~~ OSS consisting ~~solely~~ of ~~a~~ septic tanks and a gravity SSAS in soil type 1 if all the following criteria are met:

(a) The ~~system~~ OSS serves a single-family residence;

(b) The lot size is ~~greater than~~ two and one-half acres or larger;

(c) Annual precipitation in the region is less than 25 inches per year from a reputable source approved by the local health officer ~~as described by "Washington Climate" published jointly by the Cooperative Extension Service, College of Agriculture, and Washington State University (available for inspection at Washington state libraries)~~;

(d) The ~~system~~ OSS is located outside the 12 counties bordering Puget Sound; and

(e) The geologic conditions beneath the dispersal component must satisfy the minimum unsaturated depth requirements to ground water as determined by the health officer. The method for determination is described by "Design Guideline for Gravity Systems in Soil Type 1", 2017 (available upon request to the department).

~~(7) The health officer may increase the loading rate in Table VIII up to a factor of two for soil types 1 to 4 and up to a factor of one and one-half for soil types 5 and 6 if a product tested to meet treatment level D is used. This reduction may not be combined with any other SSAS size reductions.~~

(8) ~~(a) The~~ Both the primary and reserve areas must be sized ~~to~~ at least 100 percent of the approved loading rates ~~listed in Table VIII~~. The local health officer may require the sizing of the reserve area using the loading rate in Table VIII of this section. Column A must be used when sizing the primary area using Column B.

~~(b) However, the health officer may allow a legal lot of record created prior to the effective date of this chapter that cannot meet this primary and reserve area requirement to be developed if all the following conditions are met:~~

~~(i) The lot cannot meet the minimum primary and reserve area requirements due to the loading rates for medium sand, fine sand and very fine sand listed in Table VIII of this chapter;~~

~~(ii) The primary and reserve areas are sufficient to allow installation of a SSAS using maximum loading rates of 1.0 gallons/square foot per day for medium sand, 0.8 gallons/square foot/day for fine sand, and 0.6 gallons/square foot/day for very fine sand; and~~

~~(iii) A treatment product meeting at least treatment level D and pressure distribution with timed-dosing is used. [Ord. H.Ord.061107 §1, 2007]~~

DRAFT

**8.40.200 Design requirements - Facilitate operation, monitoring and maintenance.**

(1) The OSS must be designed to facilitate routine operation, monitoring and maintenance according to the following criteria:

(a) For gravity ~~systems,~~ OSS;

(i) Septic ~~septic~~ tank access for maintenance and inspection at finished grade is required~~. If effluent filters are used, access to the filter at finished grade is required~~. The health officer may allow access for maintenance and inspection of a ~~system consisting of a septic~~ sewage ~~tank and gravity flow SSAS~~ to be a maximum of six inches below finished grade, provided a marker showing the location of the tank access is installed at finished grade.

(ii) Each SSAS lateral must include at least one observation port installed in a representative location in order to facilitate SSAS monitoring.

(b) For all other ~~systems~~ OSS, service access and monitoring ports at finished grade are required for all system components. Specific component requirements include:

(i) Septic tanks must have service access maintenance holes (formerly manholes) manholes and monitoring ports for the inlet and outlet~~. If effluent filters are used, access to the filter at finished grade is required~~;

(ii) Surge, flow equalization or other sewage tanks must have service access ~~manholes~~ maintenance holes;

(iii) Other pretreatment units ~~(~~such as aerobic treatment units and packed-bed filters~~)~~ must have service access maintenance holes ~~manholes~~ and monitoring ports;

(iv) Pump chambers, tanks and vaults must have service access maintenance holes ~~manholes~~;

(v) Disinfection units must have service access and be installed to facilitate complete maintenance and cleaning, including an easy-access, freefall sampling port; and

(vi) Soil dispersal components, ~~shall~~ excluding subsurface drip, must have monitoring ports for both distribution devices and the infiltrative surface.

(c) For systems using pumps, clearly accessible controls and warning devices are required including:

(i) Process controls such as floats ~~and~~ pressure activated pump on/off switches, and pump-run timers ~~and process flow controls~~;

DRAFT

(ii) Diagnostic tools including dose cycle counters and hour meters on the sewage stream, or flow meters on either the water supply or sewage stream; and

(iii) Audible and visual alarms designed to alert a resident of a malfunction. The alarm must be placed on a circuit independent of the pump circuit.

(2) All accesses must be designed to allow for monitoring and maintenance and shall be secured to minimize injury or unauthorized access in a manner approved by the health officer. ~~[Ord. H.Ord.061107 §1, 2007]~~

**8.40.210 Holding tank sewage systems.**

(1) A person may not install or use holding tank sewage systems for residential development or expansion of residences, whether seasonal or year-round, except as set forth under subsection (2) of this section.

(2) The health officer may approve installation of holding tank sewage systems only:

(a) For permanent uses limited to controlled, part-time, commercial usage situations, such as recreational vehicle parks and trailer dump stations;

(b) For interim uses limited to handling of emergency situations; or

(c) For repairs as permitted under WAC 246-272A-0280(1)(c)(i).

(3) A person proposing to use a holding tank sewage system shall:

(a) Follow design criteria established by the department;

(b) Submit a management program to the health officer assuring ongoing operation, monitoring and maintenance before the health officer issues the installation permit; and

(c) Use a holding tank reviewed and approved by the health officer. ~~[Ord. H.Ord.061107 §1, 2007]~~

**8.40.220 Installation.**

(1) Only installers may construct OSS, except as noted under subsection (2 and 3) of this section.

(2) The local health officer may allow the resident owner of a single-family residence to install the OSS for that single-family residence except when:

(a) The primary and reserve areas are within 200 feet of marine water;

(b) The primary and reserve areas are within 100 feet of surface water;

DRAFT

(c) The installation permit meets Table X standards in WAC 246-272A-0280.

(3~~2~~) The health officer may allow the resident owner of a single-family residence to install the OSS for that single-family residence. The health officer may require demonstration of competency, including, but not limited to, passing the installer's examination, prior to approving resident owner installation of systems other than standard septic tank and gravity SSAS.

(~~3~~ 4) The installer described by either subsection (1) or (2) of this section shall:

(a) Follow the approved design;

(b) Have the approved design and Lewis County issued Septic Permit in possession during installation;

(c) Make no changes to the approved design without the prior authorization of the designer and the health officer;

(d) Only install ~~septic tanks, pump chambers, and holding~~ sewage tanks approved by the department consistent with chapter 246-272C WAC;

(e) Be on the site at all times during the excavation and construction of the OSS;

(f) Install the OSS to be watertight, except for the soil dispersal component;

(g) Cover the installation only after the health officer has given approval to cover; and

(h) Back fill with six to 24 inches of cover material and grade the site to prevent surface water from accumulating over any component of the OSS. ~~[Ord. II.Ord.061107 §1, 2007]~~

**8.40.230 Inspection.**

(1) For all activities requiring a permit, the health officer shall inspect the OSS. The local health officer shall:

(a) Visit the OSS site during the site evaluation, construction, or final construction inspection;

(b) Either inspect the OSS before cover or allow the designer of the OSS to perform the inspection before cover if the designer is not also named as installer of the system~~.~~ ; and

(c) Keep the record drawings on file, with the approved design documents.

(2) Prior to any inspection, the local health officer or inspector authorized by the local health officer shall coordinate with the OSS owner to obtain access. When the owner does

DRAFT

not authorize access, the local health officer may follow the administrative search warrant procedures in RCW 70A3105.030 to gain access.

(3) For any OSS located on a single property serving one dwelling unit on the same property, the local health officer shall not require a property owner to grant inspection and maintenance easements as a condition of receiving a permit.

(4) During the final construction inspection, the local health officer or the designer of the OSS must confirm the OSS meets the approved design.

(5) To comply with the requirements of WAC 246-272A-0270 (1) (e) or (k), an inspection must include, at a minimum:

(a) Inspection and evaluation of:

(i) The status of all sewage tanks including baffles, effluent filters, tank contents such as water level, scum, sludge, solids, water tightness, and general structural conditions;

(ii) The status of all lids, accesses, and risers;

(iii) The OSS and reserve area of any indicators of OSS failure or conditions that may impact system function, operation, or repair; and

(iv) Any other components such as distribution boxes;

(b) A review of the record drawing and related documents, including previous reports to confirm the system is operating as designed; and

(c) Any proprietary products following the procedures of the accepted operations and maintenance manual associated with those products.

(6) Evidence of an OSS property transfer inspection as required in WAC 246-272A-0270 (1) (k) must be provided to the local health jurisdiction on a form approved by the local health officer, including at a minimum:

(a) All applicable information from subsection (5) of this section;

(b)The address of the property served by the OSS;

(c) The date of the inspection;

(d) The permitted type and design flow for known OSS; and

DRAFT

(e) Verification that the record drawing is accurate, or an OSS site plan showing the location of all system components relative to structures and prominent site features.

(7) A local health jurisdiction may require an additional inspection report, or additional information, for an inspection required under WAC 246-272A-0270 (1). The person responsible for the final construction inspection shall assure the OSS meets the approved design. ~~[Ord. H.Ord.061107 §1, 2007]~~

**8.40.240 Record drawings.**

Upon completion of ~~the~~ new construction, alteration or repair of the OSS, the OSS owner or their agent shall submit ~~designer or installer, as directed by the health officer, shall submit~~ a complete and detailed record drawing to ~~both~~ the health officer ~~and the OSS owner~~ that includes at a minimum ~~the following~~:

(1) Measurements and directions accurate to plus or minus one-half foot, unless otherwise determined by the health officer, ~~to assure~~ so that the following parts of the OSS can be easily located:

(a) All sewage tank openings requiring access;

(b) The ends, and all changes in direction, of installed and found buried pipes and electrical cables that are part of the OSS; and

(c) Any other OSS component which, in the judgment of the local health officer or the designer, must be accessed for observation, maintenance, or operation;

(2) Location and dimensions of the reserve area;

(3) Record that materials and equipment meet the specifications contained in the design;

(4) Initial settings of electrical or mechanical devices that must be known to operate the system in the manner intended by the designer or installer; and

(5) For proprietary products, manufacturer's standard product literature, including performance specifications and maintenance recommendations needed for operation, monitoring, maintenance or repair of the OSS.

~~(6) If a designer fails to submit a record drawing within 45 days of completion of the OSS, as determined by the health officer, the health officer may refuse to accept any future designs submitted by that designer until all required documents have been submitted. [Ord. H.Ord.061107 §1, 2007]~~

**8.40.250 Operation, monitoring, and maintenance - Owner responsibilities.**

DRAFT

(1) The OSS owner is responsible for operating, monitoring, and maintaining the OSS to minimize the risk of failure, and ~~to accomplish this purpose,~~ shall:

(a) Request assistance from the local health officer upon occurrence of a system failure or suspected system failure;

(b) Obtain approval from the health officer before:

(i) Repairing ~~repairing~~, altering, or expanding an OSS as required by WAC 246-272A-0200; or;

(ii) Before beginning the use of any newly constructed OSS;

(~~b~~ c) Secure and renew contracts for periodic maintenance ~~where~~ if required by the local health jurisdiction;

(~~c~~ d) Obtain and renew operation permits if required by the local health jurisdiction;

(~~d~~ e) ~~Assure a complete evaluation of the system components and/or property to determine functionality, maintenance needs and compliance with regulations and any permits~~ The owner of every residence, business, or other place where persons congregate, reside or are employed that is served by an OSS, and each person with access to deposit materials in the OSS, shall use, operate, and maintain the system to eliminate the risk to the public associated with improperly treated sewage. Owners' duties are included, without limitation, in the following list:

(i) At least once every three years, unless more frequent inspections are specified by the local health officer, for all ~~systems~~ OSS consisting solely of a ~~septic~~ sewage tank and gravity SSAS;

(ii) Annually for all other ~~systems~~ OSS unless more frequent inspections are specified by the health officer;

(iii) Submit the results of the inspection to the local health jurisdiction, using a form approved by the local health officer and in compliance with WAC 246-272A-0260 (5);

(~~e~~ f) Employ an approved pumper to remove the septage from the tank when the level of solids and scum indicates that removal is necessary. The septic tank shall be pumped when the sludge accumulation is within 12 inches of the bottom of the outlet baffle or when the scum layer is within three inches of the bottom of the outlet baffle or the scum layer is within one inch of the top of the outlet baffle in either compartment or, when the total amount of solids, in either chamber, equals or exceeds one-third the volume of the chamber, whichever is most lenient. The pump and/or siphon chamber(s) shall be pumped when solids are observed;

DRAFT

(~~f~~ g) Provide ongoing maintenance and complete any needed repairs to promptly return the ~~system~~ OSS to a proper operating condition;

(~~g~~ h) Protect the OSS area and the reserve area from:

(i) Cover by structures or impervious material;

(ii) Surface drainage, and direct drains, such as footing or roof drains. The drainage must be directed away from the area where the OSS is located;

(iii) Soil compaction.~~, for~~ For example by vehicular traffic or livestock; and

(iv) Damage by soil removal and grade alteration;

(~~h~~ i) Keep the flow of sewage to the OSS at or below the approved operating capacity and sewage quality;

(~~i~~ j) Operate and maintain ~~systems~~ OSS as directed by the health officer;

(i) Any person performing operations and maintenance inspections on OSS for a fee must be licensed according to LCC 8.40.320.

~~(j) Request assistance from the health officer upon occurrence of a system failure or suspected system failure; and~~

(k) At the time of property transfer:~~, provide~~

(i) Provide to the buyer, all available OSS maintenance records and repair records~~, if available,~~ in addition to the completed seller disclosure statement in accordance with Chapter 64.06 RCW for residential real property transfers;~~.~~

(ii) Beginning February 1, 2027, obtain an inspection, as required in WAC 246-272A-0260 (5), by a third-party inspector authorized by the local health officer. The local health officer may:

(A) Remove the requirement for an inspection at the time of property transfer if the local health jurisdiction has evidence that the OSS is in compliance with (e) of this subsection and the OSS was inspected by a third-party inspector authorized by the local health officer;
(B) (B) Verify the result of the property inspection for compliance with WC 246-272A-0260; and
(C) Require additional inspections and other requirements not listed in WAC 246-272A-0260;

(iii) Beginning February 1, 2027, obtain an inspection of proprietary treatment products per the product manufacturer recommendations, as required in WAC 246-

DRAFT

272A-0260, by a third-party inspector authorized by the local health officer. The local health officer may:

(A) Remove the requirement for an inspection at the time of property transfer if the local health jurisdiction has evidence that the OSS is in compliance with (e) of this subsection and the OSS was inspected by a third-party inspector authorized by the local health officer;
(B) Verify the results of the property inspection for compliance with WAC 246-272A-0260; and
(C) Require additional inspections and other requirements not listed in WAC 246-272A-0260;

(iv) Submit the results of the inspection, and any additional information or reports required by the local health officer, to the local health jurisdiction, using an inspection report form approved by the local health officer. The local health officer may require a compliance schedule for repair of a failure discovered during the property transfer inspection.

(2) ~~Persons shall~~ A person may not:

(a) Use or introduce strong bases, acids or chlorinated organic solvents into an OSS for the purpose of system cleaning;

(b) ~~Use a sewage system~~ an OSS additive unless it is specifically approved by the department; ~~or~~

(c) Use an OSS to dispose of waste components atypical of sewage from a residential source.

(d) Use any remediation process or activity unless it is approved by the local health officer and is in compliance with WAC 246-272A-0278. ~~[Ord. H.Ord.061107 §1, 2007]~~

**8.40.260 Operation, monitoring, and maintenance - Food service establishments.**

~~The health officer shall require annual inspections of OSS serving food service establishments and may require operation and maintenance permits for food service establishments utilizing OSS and may condition the terms and requirements in such permits based on establishment size, wastewater volumes and strength, whether seasonal or year-round operation, lot size and presence of reserve or replacement area, location in aquifer recharge or aquifer sensitive area, or other criteria as determined by the health officer.~~

(1)The Department requires the following:

DRAFT

(a). Annual O&M inspections of the OSS serving regulated establishments such as food service operations, camping facilities, mobile home parks, and RV parks.

(b). Review and approval of changes to the OSS, if inspections or plan reviews document the potential for quality or quantity changes to the establishment's sewage flow. Regulated establishments utilizing OSS shall submit information to the Department upon any change in ownership or of menu or operation to determine if it will affect sewage quantity or quality.

(c) An evaluation by a designer for any changes determined by the Department to have a potentially deleterious effect on the OSS.

(d) The establishment to repair or replace their OSS, in an expedient manner, if any problems are found.

(2) The local Health Officer:

(a) Shall not issue a food permit to any new food establishment not meeting the standards of this code or current state code.

(b) Shall not issue a food permit to any food establishment that has undergone a change of ownership that utilizes OSS, where the OSS is determined by the Department to be inadequate.

(c) Shall have cause not to renew a food permit to an existing food establishment which utilizes OSS if mandated annual inspection is not complete or OSS is determined to be inadequate by the Department.

~~[Ord. II.Ord.061107 §1, 2007]~~

8.40.265 Remediation

(1) The local health officer may establish a program and requirements for reviewing and approving remediation activities

(2) Remediation must not:

(a) result in damage to the OSS

(b) Result in insufficient soil treatment in the zone between the soil dispersal component and the highest seasonal water table, restrictive layer, or soil type 7; or

(c) disturbed the soil in or below the soil dispersal component if the vertical separation requirements of WAC 246-272A-0230 are not met.

DRAFT

**8.40.270 Repair of failures.**

~~(1) When an OSS failure occurs, the OSS owner shall:~~

~~(a) Repair or replace the OSS with a conforming system or component, or a system meeting the requirements of Table IX either on the:~~

~~(i) Property served; or~~

~~(ii) Nearby or adjacent property if easements are obtained; or~~

~~(b) Connect the residence or facility to a:~~

~~(i) Publicly owned LOSS;~~

~~(ii) Privately owned LOSS where it is deemed economically feasible; or~~

~~(iii) Public sewer; or~~

~~(c) Perform one of the following when requirements in subsections (1)(a) and (b) of this section are not feasible:~~

~~(i) Use a holding tank; or~~

~~(ii) Obtain a National Pollution Discharge Elimination System or state discharge permit from the Washington State Department of Ecology issued to a public entity or jointly to a public entity and the system owner only when the health officer determines:~~

~~(A) An OSS is not feasible; and~~

~~(B) The only realistic method of final dispersal of treated effluent is discharge to the surface of the land or into surface water; or~~

~~(iii) Abandon the property.~~

~~(2) Prior to repairing the soil dispersal component, the OSS owner shall develop and submit information required under WAC 246-272A-0200(1).~~

~~(3) The health officer shall permit a system that meets the requirements of Table IX only if the following are not feasible:~~

~~(a) Installation of a conforming system or component; and~~

~~(b) Connection to either an approved LOSS or a public sewer.~~

~~(4) The person responsible for the design shall locate and design repairs to:~~

DRAFT

~~(a) Meet the requirements of Table IX if the effluent treatment and soil dispersal component to be repaired or replaced is closer to any surface water, well, or spring than prescribed by the minimum separation required in Table IV of WAC 246-272A-0210(1). Pressure distribution with timed dosing in the soil dispersal component is required in all cases where a conforming system is not feasible.~~

~~(b) Protect drinking water sources and shellfish harvesting areas;~~

~~(c) Minimize nitrogen discharge in areas where nitrogen has been identified as a contaminant of concern in the local plan under WAC 246-272A-0015;~~

~~(d) Prevent the direct discharge of sewage to ground water, surface water, or upon the surface of the ground;~~

~~(e) Meet the horizontal separations under WAC 246-272A-0210(1) to public drinking water sources;~~

~~(f) Meet other requirements of this chapter to the maximum extent permitted by the site; and~~

**~~TABLE IX~~**

**~~Treatment Component Performance Levels for Repair of OSS Not Meeting Vertical and Horizontal Separations[1]~~**

| ~~Vertical Separation (in Inches)~~ | ~~Horizontal Separation[2]~~ | | | | | | | | | | | |
|---|---|---|---|---|---|---|---|---|---|---|---|---|
| | ~~< 25 feet~~ | | | ~~25 < 50 feet~~ | | | ~~50 < 100 feet[3]~~ | | | ~~≥ 100 feet~~ | | |
| | ~~Soil Type~~ | | | ~~Soil Type~~ | | | ~~Soil Type~~ | | | ~~Soil Type~~ | | |
| | ~~1~~ | ~~2~~ | ~~3 - 6~~ | ~~1~~ | ~~2~~ | ~~3 - 6~~ | ~~1~~ | ~~2~~ | ~~3 - 6~~ | ~~1~~ | ~~2~~ | ~~3 - 6~~ |
| ~~< 12~~ | ~~A~~ | ~~A~~ | ~~A~~ | ~~A~~ | ~~A~~ | ~~A~~ | ~~A~~ | ~~A~~ | ~~B~~ | ~~B~~ | ~~B~~ | ~~B~~ |
| ~~≥ 12 < 18~~ | ~~A~~ | ~~A~~ | ~~A~~ | ~~A~~ | ~~B~~ | ~~B~~ | ~~A~~ | ~~B~~ | ~~B~~ | ~~Conforming Systems~~ | | |
| ~~≥ 18 < 24~~ | ~~A~~ | ~~A~~ | ~~A~~ | ~~A~~ | ~~B~~ | ~~B~~ | ~~A~~ | ~~B~~ | ~~C~~ | | | |
| ~~≥ 24 - 36~~ | ~~A~~ | ~~B~~ | ~~B~~ | ~~B~~ | ~~C~~ | ~~C~~ | ~~B~~ | ~~C~~ | ~~C~~ | | | |
| ~~≥ 36~~ | ~~A~~ | ~~B~~ | ~~B~~ | ~~B~~ | ~~C~~ | ~~C~~ | ~~B~~ | ~~C~~ | ~~E~~ | | | |

[1] ~~The treatment component performance levels correspond with those established for treatment components under the product performance testing requirements in Table III of WAC 246-272A-0110.~~

[2] ~~The horizontal separation indicated in Table IX is the distance between the soil dispersal component and the surface water, well, or spring. If the soil dispersal component is up-gradient of a surface water, well, or spring to be used as a potable water source, or beach where shellfish are harvested, the next higher treatment level shall apply unless treatment level A is already required.~~

[3] ~~On a site where there is a horizontal setback of 75 to 100 feet between an OSS dispersal component and an individual water well, individual spring, nonmarine surface water or surface water that is not a public water source and a vertical separation of greater than 12 inches, a conforming system that complies with WAC 246-272A-0210(4) shall be installed if feasible.~~

~~(g) Maximize the:~~

~~(i) Vertical separation;~~

~~(ii) Distance from a well, spring, or suction line; and~~

~~(iii) Distance to surface water.~~

~~(5) Prior to designing the repair system, the designer shall consider the contributing factors of the failure to enable the repair to address identified causes.~~

~~(6) If the vertical separation is less than 12 inches, the health officer may permit ASTM C-33 sand or coarser to be used as fill to prevent direct discharge of treated effluent to ground water, surface water, or upon the surface of the ground.~~

~~(7) For a repair using the requirements of Table IX, disinfection may not be used to achieve the fecal coliform requirements to meet:~~

~~(a) Treatment levels A or B where there is less than 18 inches of vertical separation;~~

~~(b) Treatment levels A or B in type 1 soils; or~~

~~(c) Treatment level C.~~

~~(8) The health officer shall identify repair permits meeting the requirements of Table IX for the purpose of tracking future performance.~~

~~(9) An OSS owner receiving a repair permit for a system meeting the requirements of Table IX from the health officer shall:~~

DRAFT

~~(a) Immediately report any failure to the health officer;~~

~~(b) Comply with all local and state requirements stipulated on the permit.~~

(1) When an OSS failure occurs the local health officer shall:

(a) Allow an OSS to be repaired using the least costly alternative that meets standards and is likely to provide comparable or better long-term sewage treatment and effluent dispersal outcomes;

(b) Permit an OSS meeting the requirements in Table X of this section only if the OSS has failed and the following are not feasible:

(i) Installation of a conforming OSS or component; or

(ii) Connection to either an approved LOSS or public sewer.

(c) Identify repair permits meeting the requirements in Table X of this section for the purpose of tracking future performance;

(d) Give first priority to allowing repair and second priority to allowing replacement of an existing conventional OSS, consisting of a septic tank and drainfield, with a similar conventional OSS;

(e) Evaluate all unpermitted sewage discharges to determine if they pose a public health threat. If determined by the local health officer to be a public health threat, the local health officer shall require a compliance schedule;

(f) Report failures within 200 feet of shellfish growing areas to the department; a

(g) Not impose or allow the imposition of more stringent performance requirements of equivalent OSS on private entities than public entities.

(2) The local health officer may:

(a) Require a compliance schedule for failure using ASTM C-33 sand or coarser as fill to prevent direct discharge of treated effluent to groundwater, surfacewater, or upon the surface of the ground if the vertical separation is less than 12 inches.

(3) The OSS owner shall notify the local health officer when there is a failure and indicate which methods will be used to address the failure in accordance with Table IX of this section:

DRAFT

(a) The owner may use option D only if the local health officer determines options A through C are not feasible and may use option E or F only if options A through D are not feasible.

(b) For options A through F, the owner shall develop and submit information and obtain a permit as required under WAC 246-272A-0200 prior to any repair or replacement of an OSS on the property served or a nearby property is the owner obtains an appropriate documentation including, but not limited to, an easement, covenant, contract, or other legal document authorizing access for construction, operations, maintenance and repair.

(c) If options A through F are not feasible, the owner shall discontinue use of the OSS, abandon the loss according to the requirements in WAC 246-272A-0300 and cease all sewage generating activities on the property

Table IX

Options and Methods to Address an OSS Failure[4]

| Vertical Separation (in inches) | Horizontal Separation[5] | | | | | | | | | | | |
|---|---|---|---|---|---|---|---|---|---|---|---|---|
| | <30 feet | | | >30 <50 feet | | | >50 <100 feet[6] | | | >100 feet | | |
| | Soil Type | | | Soil Type | | | Soil Type | | | Soil Type | | |
| | 1 | 2 | 3-6 | 1 | 2 | 3-6 | 1 | 2 | 3-6 | 1 | 2 | 3-6 |
| < 12 | A & BL1 | A & BL1 | A & BL1 | A & BL1 | A & BL1 | A & BL1 | A & BL1 | A & BL1 | A & BL1 | B & BL2 | B & BL2 | B & BL2 |
| >12 >18 | A & BL1 | A & BL1 | A & BL1 | A & BL1 | B & BL2 | B & BL2 | A & BL1 | B & BL2 | B & BL2 | Conforming OSS | | |
| >18 >24 | A & BL1 | A & BL1 | A & BL1 | A & BL1 | B & BL2 | B & BL2 | A & BL1 | B & BL2 | B & BL2 | | | |

[5] The horizontal separation indicated in Table X of this section is the distance between the soil dispersal component and the surface water, well, or spring. If the soil dispersal component is up-gradient of a surface water, well, or spring to be used as potable water source, or beach where shellfish are harvested, the next higher treatment level shall apply unless treatment level A and VL1 is already required.

[6] On a site where there is a horizontal setback of 75-100 feet between an OSS dispersal component and an individual water well, individual spring, nonmarine surface water, or surface water that is not a public water source and a vertical separation of greater than 12 inches, a conforming OSS that complies with WAC 246-272A-0210 (4) shall be installed if feasible.

DRAFT

| | | | | | | | | | | |
|---|---|---|---|---|---|---|---|---|---|---|
| >24 >36 | A & BL1 | B & BL2 | B & BL2 | B & BL2 | B & BL2 | B & BL2 | B & BL2 | B & BL2 | C & BL3 | |
| >36 | A & BL1 | B & BL2 | B & BL2 | B & BL2 | C & BL3 | C & BL3 | B & BL2 | C & BL3 | C & BL3 | |

[4] The treatment component performance levels correspond with those established for treatment components under the product performance testing requirements in Table III in WAC 246-272A-0110.

[5] The horizontal separation indicated in Table X of this section is the distance between the soil dispersal component and the surface water, well, or spring. If the soil dispersal component is up-gradient of a surface water, well, or spring to be used as potable water source, or beach where shellfish are harvested, the next higher treatment level shall apply unless treatment level A and VL1 is already required.

[6]On a site where there is a horizontal setback of 75-100 feet between an OSS dispersal component and an individual water well, individual spring, nonmarine surface water, or surface water that is not a public water source and a vertical separation of greater than 12 inches, a conforming OSS that complies with WAC 246-272A-0210 (4) shall be installed if feasible.

(4) When there is an OSS failure, the OSS designer shall:

(a) Evaluate the causes of failure prior to designing the repair or placement of the OSS;

(b) Prevent the direct discharge of sewage or treated effluent to groundwater, surfacewater, or upon the surface of the ground/

(c) Meet the horizontal separations under WAC 246-272A-0210 (1) to public drinking water sources;

(d) Protect all drinking water sources, shellfish harvesting areas, and water recreation facilities designated for swimming in natural waters;

(e) Minimize nitrogen discharge in areas where nitrogen has been identified as a contaminant of concern in the local management plan under WAC 246-272A-0015;

(f) Not use disinfection to achieve fecal coliform or E. coli requirements in Table X of this section to meet:

(i)Treatment level BL1 or BL2 with less than 18 inches of vertical separation; or

(ii) Treatment level BL3.

(g) Minimize impact of phosphorous discharge in areas where the local health officer has identified phosphorous as a contaminant of

DRAFT

concern in the local management plan under WAC 246-272A-0015;

(h) Locate and design repairs meeting the requirements in Table X of this section is the effluent treatment and soil dispersal component to be repaired or replaced is closer to any surface water, well, or spring than prescribed by the minimum separation required in Table IV of WAC 246-272A-0210 (1);

(i)Design any nonconforming OSS using pressure distribution with timed dosing in the soil dispersal component; and

(j) Meet all other design requirements of this chapter to the maximum extent permitted by the site, to maximize the:

(i) Vertical separation

(ii) Distance from a well or spring; and

(iii) Distance to surface water.

~~[Ord. II.Ord.061107 §1, 2007]~~

**8.40.280 Expansions.**

(1) The health officer shall require an OSS and a reserve area in full compliance with the new ~~system~~ OSS construction standards specified in this chapter for an OSS ~~expansion of a residence or other facility~~.

(2) A health officer may allow expansion of an existing ~~on-site sewage system~~ OSS within 200 feet of ~~adjacent to~~ a marine shoreline that does not meet the minimum horizontal separation between the soil dispersal component and the ordinary high-water mark required by WAC 246-272A-0210, Table IV; provided, that:

(a) The ~~system~~ OSS meets all requirements of WAC 246-272A-0230, 246-272A-0232, 246-272A-0234, and 246-272A-0238;

(b) The ~~system~~ OSS complies with all other requirements of WAC 246-272A-0210 and this section;

(c) Horizontal separation between the soil dispersal component and the ordinary high-water mark is 50 feet or greater; and

(d) Vertical separation is two feet or greater. ~~[Ord. II.Ord.061107 §1, 2007]~~

**8.40.290 Abandonment.**

DRAFT

Persons permanently abandoning a ~~septic~~ sewage tank, seepage pit, cesspool, or other sewage container shall:

(1) Have the septage removed by an approved pumper; and

(2) Perform one of the following:

(a) Remove and dispose of sewage tanks and other components in a manner approved by the local health officer; or

(b) Leave the sewage tanks and components in place. Remove or destroy the lid if possible~~;~~, and

~~(3) Fill~~ fill the void with soil or gravel; and

(3) Grade the site to the surroundings. ~~[Ord. H.Ord.061107 §1, 2007]~~

**8.40.300 Septage management.**

~~(1) Persons pumping septic tanks shall be certified as provided in LCC 8.40.320 before they may remove septage from an OSS.~~

~~(2) Persons~~ A person removing septage from an OSS shall obtain approval from the local health officer before removal and:

(~~a~~ 1) Transport septage or sewage only in vehicles clearly identified with the name of the business and approved by the health officer;

(~~b~~ 2) Record and report septage removal as required by the health officer; and

(~~c~~ 3) Dispose of septage or apply septage biosolids to land only in a manner consistent with applicable laws. ~~[Ord. H.Ord.061107 §1, 2007]~~

**8.40.310 Developments, subdivisions, and minimum land area requirements.**

~~(1) A person proposing a subdivision where the use of OSS is planned shall obtain a recommendation for approval from the health officer as required by RCW 58.17.150.~~

~~(2) The health officer shall require the following prior to approving any development:~~

~~(a) Site evaluations as required under WAC 246-272A-0220, excluding subsections (3)(a)(i) and (4)(d);~~

~~(b) Where a subdivision with individual wells is proposed:~~

~~(i) Configuration of each lot to allow a 100-foot radius water supply protection zone to fit within the lot lines; or~~

DRAFT

~~(ii) Establishment of a 100-foot protection zone around each existing and proposed well site;~~

~~(c) Where preliminary approval of a subdivision is requested, provision of at least one soil log per proposed lot, unless the health officer determines existing soils information allows fewer soil logs;~~

~~(d) Determination of the minimum lot size or minimum land area required for the development using Method I and/or Method II:~~

~~**METHOD I.** Table X, Minimum Land Area Requirement Single-Family Residence or Unit Volume of Sewage, shows the minimum lot size required per single-family residence. For developments other than single-family residences, the minimum land areas shown are required for each unit volume of sewage. However, the health officer may require larger lot sizes where the health officer has identified nitrogen as a concern either through planning activities described in WAC 246-272A-0015 or another process.~~

~~**TABLE X**~~

~~**Minimum Land Area Requirement Single-Family Residence or Unit Volume of Sewage**~~

| ~~**Type of Water Supply**~~ | ~~**Soil Type (defined by WAC 246-272A-0220)**~~ | | | | | |
|---|---|---|---|---|---|---|
| | ~~**1**~~ | ~~**2**~~ | ~~**3**~~ | ~~**4**~~ | ~~**5**~~ | ~~**6**~~ |
| ~~Public~~ | ~~0.5 acre~~ | ~~12,500 sq. ft.~~ | ~~15,000 sq. ft.~~ | ~~18,000 sq. ft.~~ | ~~20,000 sq. ft.~~ | ~~22,000 sq. ft.~~ |
| | ~~2.5 acres[1]~~ | ~~-~~ | ~~-~~ | ~~-~~ | ~~-~~ | ~~-~~ |
| ~~Individual, on each lot~~ | ~~1 acre~~ | ~~1 acre~~ | ~~1 acre~~ | ~~1 acre~~ | ~~2 acres~~ | ~~2 acres~~ |
| | ~~2.5 acres[1]~~ | ~~-~~ | ~~-~~ | ~~-~~ | ~~-~~ | ~~-~~ |

~~[1]See WAC 246-272A-0234(6).~~

~~**METHOD II.** A minimum land area proposal using Method II is acceptable only when the applicant:~~

~~(i) Justifies the proposal through a written analysis of the:~~

~~(A) Soil type and depth;~~

~~(B) Area drainage, and/or lot drainage;~~

~~(C) Public health impact on ground and surface water quality;~~

~~(D) Setbacks from property lines, water supplies, etc.;~~

~~(E) Source of domestic water;~~

~~(F) Topography, geology, and ground cover;~~

~~(G) Climatic conditions;~~

~~(H) Availability of public sewers;~~

~~(I) Activity or land use, present and anticipated;~~

~~(J) Growth patterns;~~

~~(K) Reserve areas for additional subsurface treatment and dispersal;~~

~~(L) Anticipated sewage volume;~~

~~(M) Compliance with current planning and zoning requirements;~~

~~(N) Types of proposed systems or designs, including the use of systems designed for removal of nitrogen;~~

~~(O) Existing encumbrances, such as those listed in WAC 246-272A-0200(1)(c)(v) and 246-272A-0220(2)(a)(vii); and~~

~~(P) Estimated nitrogen loading from OSS effluent to existing ground and surface water;~~

~~(Q) Any other information required by the health officer;~~

~~(ii) Shows development with public water supplies having:~~

~~(A) At least 12,500 square feet lot sizes per single-family residence;~~

~~(B) No more than 3.5 unit volumes of sewage per day per acre for developments other than single-family residences; and~~

~~(iii) Shows development with individual water supplies having at least one acre per unit volume of sewage; and~~

~~(iv) Shows land area under surface water is not included in the minimum land area calculation; and~~

DRAFT

~~(e) Regardless of which method is used for determining required minimum lot sizes or minimum land area, submittal to the health officer of information consisting of field data, plans, and reports supporting a conclusion the land area provided is sufficient to:~~

~~(i) Install conforming OSS;~~

~~(ii) Assure preservation of reserve areas for proposed and existing OSS;~~

~~(iii) Properly treat and dispose of the sewage; and~~

~~(iv) Minimize public health effects from the accumulation of contaminants in surface and ground water.~~

~~(3) The department shall develop guidelines for the application of Method II by July 1, 2008.~~

~~(4) The health officer shall require lot areas of 12,500 square feet or larger except when a person proposes:~~

~~(a) OSS within the boundaries of a recognized sewer utility having a finalized assessment roll; or~~

~~(b) A planned unit development with:~~

~~(i) A signed, notarized, and recorded deed covenant restricting any development of lots or parcels above the approved density with the overall density meeting the minimum land area requirements of subsection (2)(d) of this section;~~

~~(ii) A public entity responsible for operation and maintenance of the OSS, or a single individual owning the OSS;~~

~~(iii) Management requirements under Chapter 246-272B WAC when installing a LOSS; and~~

~~(iv) Extinguishment of the deed covenant and higher density development allowed only when the development connects to public sewers.~~

~~(5) The health officer may:~~

~~(a) Allow inclusion of the area to the centerline of a road or street right-of-way in a Method II determination under subsection (2)(d) of this section to be included in the minimum land area calculation if:~~

~~(i) The dedicated road or street rights-of-way are along the perimeter of the development;~~

~~(ii) The road or street rights-of-way are dedicated as part of the proposed development; and~~

~~(iii) Lots are at least 12,500 square feet in size;~~

DRAFT

~~(b) Require detailed plot plans and OSS designs prior to final approval of subdivision proposals;~~

~~(c) Require larger land areas or lot sizes to achieve public health protection;~~

~~(d) Prohibit development on individual lots within the boundaries of an approved subdivision if the proposed OSS design does not protect public health by meeting requirements of these regulations; and~~

~~(e) Permit the installation of an OSS, where the minimum land area requirements or lot sizes cannot be met, only when all of the following criteria are met:~~

~~(i) The lot is registered as a legal lot of record created prior to the effective date of this chapter;~~

~~(ii) The lot is outside an area identified by the local plan developed under WAC 246-272A-0015 where minimum land area has been listed as a design parameter necessary for public health protection; and~~

~~(iii) The proposed system meets all requirements of these regulations other than minimum land area.~~

~~(6) The use of a reduced-sized SSAS does not provide for a reduction in the minimum land area requirements established in this section. Site development incorporating reduced-sized SSAS must meet the minimum land area requirements established in state and local codes.~~

(1) Prior to approving any development, the local health officer shall:

(a) Require site evaluations under WAC 246-272A-0220;

(b) Require information consisting of field data, plans, and reports supporting a conclusion that the proposed land area is sufficient to:

(i) Install conforming OSS;

(ii) Preserve reserve areas for proposed and existing OSS; and

(iii) Properly treat and dispose of the sewage;

(c) Require information demonstrating that the proposed development will minimize adverse public health effects from accumulation of contaminants in groundwater and surface water;

DRAFT

(d) Determine the minimum land area required for the development using Table XI of this section, or the alternative methodology in Table XII of this section. The local health officer may require larger lot sizes than the minimum standards established in Table XI or Table XII of this section;

(e) Require all proposals not meeting the minimum land area requirements in Table XI of this section to demonstrate the proposed development;

(i) Minimizes adverse impacts to public health, surface water or Groundwater quality;

(ii) Considers:

(A) Topography, Geology, and ground cover;
(B) Climatic conditions;
(C) Availability of public sewers; and
(D) Present and anticipated land use and growth patterns

(iii) Complies with current planning and zoning requirements;

(iv) Does not exceed the nitrogen limit per land area as identified in Table XII of this section; and

(v) Does not allow new lots smaller than 13,000 square feet if served by nonpublic water supplies;

(f) Require minimum land area of 13,000 square feet or larger, except when a proposal includes:

(i) OSS within the boundaries of a recognized sewer utility having a finalized assessment roll; or

(ii) A planned unit development with a signed, notarized, and recorded deed covenant restricting any development of lots or parcels above the approved density with the overall density meeting the minimum land area requirements of (d) or € of this subsection in perpetuity or until the OSS is no longer needed as identified in WAC 246-272A-0200 (6);

(g) Require that developments other than single-family residences:

(i) Meet the minimum land areas required for each unit's volume of sewage;

(ii) Do not exceed 3.5 unit volumes of sewage per day per acre if served by public water supplies; and

DRAFT

(iii) Do not exceed 1.0 unit volume of sewage per day per acre for nonpublic water supplies; and

(h) Require that the use of a reduced-sized dispersal component does not result in a reduction of minimum land area requirements established in this section.

(2) The local health officer shall require the following prior to approving any subdivision:

(a) A recommendation for approval as required by RCW 58.17.150;

(b) Where a subdivision with nonpublic wells are proposed:

(i) Configuration of each lot line to allow a supply protection zone to fit within the lot lines; or

(ii) Water supply protection zones on more than one lot when the person proposing the subdivision or development provides s copy of a recorded restrictive covenant to each property that is sited partially or completely within the water supply protection zone;

(iii) Water supply protection zone of at least 100 foot radius for each existing or proposed well site.

(3) The local health officer may:

(a) Require detailed site plans and OSS designs prior to final approval of subdivision proposals;

(b) Require larger land areas or lot sizes to achieve public health protection;

(c) Prohibit development on individual lots within the boundaries of an approved subdivision if the proposed OSS design does not meet the requirements of this chapter; and

(d) Permit the installation of an OSS, where the minimum land area requirement or lot sizes in Table XI of this section or maximum total nitrogen in Table XII of this section cannot be met, only when the following criteria are met:

(i) The lot is registered as a legal lot of record and created prior to the effective date of the rule;

(ii) The lot is not within an area identified in the local management plan developed under WAC 246-272A-0015 where minimum land area is listed as a design parameter necessary for public health protection; and

DRAFT

(iii) The proposed OSS meets all requirements of this chapter without the use of a waiver under WAC 246-272A-0420.

Table XI

Minimum Land Area Requirement for Each Single-Family Residence or Unit Volume of Sewage and Minimum Usable Land Area

| | | Soil Type (defined by WAC 246-272A-0220) | | | | | |
|---|---|---|---|---|---|---|---|
| | | 1 | 2 | 3 | 4 | 5 | 6 |
| Minimum Land Area | **Public** Water Supply | 21,780 sq. ft. (0.5 acre) | 13,000 sq. ft. | 16,000 sq. ft. | 19,000 sq. ft. | 21,000 sq. ft. | 23,000 sq. ft. |
| | | 2.5 acres[7] | | | | | |
| | **Nonpublic** Water Supply | 1.0 acres | 1.0 acres | 1.0 acres | 1.0 acres | 2.0 acres | 2.0 acres |
| | | 2.5 acres | | | | | |
| Minimum Usable Land Area | | 2,000 sq. ft. | 2,000 sq. ft. | 2,500 sq. ft. | 3,333 sq. ft. | 5,000 sq. ft. | 10,000 sq. ft. |

Table XII

Maximum Allowable Total Nitrogen (TN) Load Per Day by Type of Water Supply. Soil Type, and Land Area[8]

| Water Supply Type | Maximum Daily TN Load | Soil Type[9] | | | | | |
|---|---|---|---|---|---|---|---|
| | | 1 | 2 | 3 | 4 | 5 | 6 |

[7] OSS consisting of only sewage tanks and gravity SSAS must have a minimum land area of 2.5 acres per WAC 246-272A-0234 (7).

[8] Based on 60 mg/L TN and 360 gal/day OSS effluent

[9] As defined in Table V in WAC 246-272A-0220

DRAFT

| | | | | | | | |
|---|---|---|---|---|---|---|---|
| Public | mg per sq. ft. | 3.8 | 6.3 | 5.1 | 4.3 | 3.9 | 3.6 |
| | lb per acre | 0.36 | 0.60 | 0.49 | 0.41 | 0.37 | 0.34 |
| Nonpublic | mg per sq. ft. | 1.9 | 1.9 | 1.9 | 1.9 | 0.9 | 0.9 |
| | lb per acre | 0.18 | 0.18 | 0.18 | 0.18 | 0.09 | 0.09 |

[11] OSS consisting of only sewage tanks and gravity SSAS must have a minimum land area of 2.5 acres per WAC 246-272A-0234 (7).

[12]Based on 60 mg/L TN and 360 gal/day OSS effluent

[13] As defined in Table V in WAC 246-272A-0220

~~[Ord. H.Ord.061107 §1, 2007]~~

**8.40.320 ~~Certification~~ Approval of installers~~, and~~ pumpers, and maintenance providers.**

(1) Performance of Construction and Repair. The construction, installation, alteration and/or repair of sewage systems shall only be performed by:

(a) Private persons constructing or altering systems on real property in which they have the primary ownership or leasehold interest; or

(b) Persons holding a valid sewage system installer's certificate pursuant to subsection (2) of this section. Persons installing, altering and/or repairing sewage systems on real property which is intended for sale shall possess a valid sewage system installer's certificate pursuant to subsection (2) of this section. The property owner or resident may not contract or hire a person or concern to perform that work, unless that person is a certified installer as set forth in subsection (2) of this section.

(2) Certification of Installers.

(a) Any person performing work on a sewage system, whether installation or construction or repair, other than persons defined in section (1)(a) of this section, shall have first obtained an installer's certificate from the health officer before engaging in such construction, installation, and/or repair. Application for such certificate shall be made on forms provided by the health officer. Such application may be denied by the health officer if the applicant is found to be unqualified, after examination as hereinafter provided, to install, construct, and/or repair sewage systems in conformance with these regulations.

DRAFT

(b) State Registration and Bond. Prior to the issuance of a certificate, the applicant shall submit evidence in writing that he possesses a current state registration certificate and bond, in accordance with Chapter 18.27 RCW (Registration of Contractors).

(c) Examination. Prior to the issuance of a certificate, the health officer shall require written examination of the applicant's knowledge of sanitary system principles and the rules, regulations, laws, and ordinances affecting the public health and safety with respect to sewage systems.

(i) If an individual does not pass the exam, he/she may retake the exam after two weeks have passed since the last exam was taken, or earlier at the discretion of the health officer, and after payment of the retesting fee as set forth in the schedule of fees of the board, Chapter 18.15 LCC.

(ii) The health officer may periodically update the written exam to incorporate new technology, regulations, and standards. The health officer may require all installers to take the revised exam at the time of certification or re-certification.

(d) Registration Fee and Continuing Education. Fees for registration certificates shall be charged in the amounts specified in the schedule of fees of the board as updated from time to time, and adopted by the board. The registration fee is nonrefundable.

(i) At the end of each calendar year, all certificates become null and void. Certificates may be renewed, but such renewal must be received prior to January 15th for the upcoming year for which renewal is sought. A person shall have until March 1st of the year for which renewal is sought to renew his/her certificate with the payment of an additional late fee. After this date, he/she shall be required to apply for and take the written examination for certification.

(ii) As a requirement of renewal, every five years an installer shall verify, in a manner acceptable to the health officer, that the installer has completed 30 hours of training during the five-year period. Certified installers on the effective date of the ordinance codified in this section shall provide verification starting on January 15, 2016, and every five years thereafter. All other installers shall provide verification starting five years after January 15th of the year following the year an installer is initially certified, and every five years thereafter. If an applicant does not provide verification by January 15th of the required year, the applicant must retake and pass the current certification examination before the department may recertify the installer. The training must directly relate to on-site sewage disposal.

If an applicant provides inaccurate or false evidence of continuing training, the individual's certificate may be revoked and the health officer may bar the individual from certification

DRAFT

for a reasonable amount of time, as determined by the health officer, subject to the right of appeal provided in LCC 8.40.330.

Continuing training hours received in a five-year period, including those in excess of 30 hours, may not be used to meet the 30-hour requirement in any succeeding five-year period.

(3) Disposal of Septic Tank Waste. The pumping, cleaning, and discharging of septic tanks, cesspools, and sewage pits shall only be performed by persons holding a valid septic tank pumper's registration certificate issued by the health officer.

(4) Certification of Septic Pumpers.

(a) Application for a septic tank pumper's registration certificate shall be made on forms provided by the health officer. Such registration may be denied by the health officer if the applicant is found to be unqualified due to defective or inadequate equipment as may be determined by the health officer, or a demonstration of negligence or violation of these regulations, or lack of requisite skill or knowledge.

(b) Fees for registration certificates shall be charged by the health officer in the amounts specified in the fee schedule as updated from time to time, and adopted by the board. The registration fee is nonrefundable. At the end of each calendar year all certificates become null and void. Certificates may be renewed, but such renewal must be applied for prior to January 15th of the year for which renewal is sought. A person shall have until March 1st of the year for which renewal is sought to renew his/her certificate with the payment of an additional late fee.

(c) Prior to the issuance of a septic tank pumper's registration certificate, the applicant must provide the health officer with assurance of liability coverage for any and all damage incurred by any citizen due to any wrongful act of such septic tank pumper. The insurance policy shall be executed by an insurance company authorized to do business in the State of Washington. The insurance must be kept in effect during the period of time for which the registration certificate is issued and cancellation or termination of the insurance policy shall automatically and without notice suspend the registration certificate.

(5) Septic System Operation and Maintenance Provider.

(a) It shall be unlawful for anyone, other than the OSS owner, to engage in the activity of operations and maintenance of OSS without first having been issued an operations and maintenance license or certification from the Department.

DRAFT

(b) Application for an O&M provider license shall be made on forms, or in a manner, provided by the Department.

(c) Application fees shall be paid at the time of application.

(d) The Department shall determine by written examination the applicant's knowledge of public health problems involved in the treatment and dispersal of sewage and necessary standards of design, construction, maintenance, and installation. If the applicant does not receive a passing mark in any such examination, the applicant shall be denied a license.

(e) The applicant may take the test only twice in any 90-day period.

(f) Licenses are good for one year and expire as determined by the Department.

(g) The applicant shall apply for renewal on forms provided by the Department.

(h) The original license and each renewal shall require a completed application on a form furnished by the Department and payment of the prescribed fee.

(i) An O&M provider's license is not transferable.

(j) Any person having been issued an O&M provider's license is required to notify the Department in writing within 30 days of any change in their business address and/or mailing address.

(k) Licenses shall not be issued or renewed if the applicant is found by the Department to be in violation of the provisions of this chapter.

(l) Employees of a licensed O&M provider may be certified by the Department to perform OSS O&M inspections in place of the licensed O&M provider under the following conditions:

(i) The licensed O&M provider must indicate, to the Department, each employee that may be certified.

(ii) Application for certification shall be made on forms provided by the Department.

(iii) Application fees shall be paid at the time of application.

(iv) The Department shall determine by written examination the applicant's knowledge of public health problems involved in the treatment and

DRAFT

dispersal of sewage and necessary standards of design, construction, maintenance, and installation. If the applicant does not receive a passing mark in any such examination, the applicant shall be denied a certification.

(v) The applicant may take the test only twice in any 90-day period.

(vi) Certifications are good for one year and expire as determined by the Department.

(vii) The applicant shall apply for renewal on forms provided by the Department.

(viii) The original certification and each renewal shall require a completed application on a form furnished by the Department and payment of the prescribed fees.

(ix) A certification is not transferable between companies or individuals.

(x) Individuals that are certified must also meet the CEU requirements of a licensed individual.

(m) Each O&M provider shall submit to the Department, not later than the twentieth day of each month, a report on a form furnished, or in a manner provided, by the Department, for each OSS inspected the previous month within Lewis County.

(n) O&M providers shall report failure of an on-site sewage system to the Department within one business day of first identifying the failure.

(o) O&M providers must notify the Department of the cancellation of any O&M contracts in Lewis County within 30 days of cancellation.

(p) Reports submitted must contain all relevant information required by the Department.

(q) Prior to the issuance of an O&M provider's license, the applicant must be in possession of a bond obtained in accordance with the special or general contractors laws of the State of Washington and provide proof of business liability insurance in the minimum amount of $100,000.

(r) Every O&M provider is required to obtain at least six hours of approved classroom (training) time (one CEU) every year.

DRAFT

(s) Subject matter and CEU training must be directly related to on-site sewage systems and be acceptable to the Department.

(t) Proof of attendance must be submitted to the Department prior to renewal of license.

(u) CEU earned by one licensee may be applied to any of his/her licenses issued by the Department relating to OSS.

(v) For proprietary products, licensed O&M providers must show training specific to the product, and/or meet the product patent holder's specifications, before being authorized by the Department as an O&M provider for that product.

(w) The Department may fine, suspend, or revoke the license of an O&M provider if there has been finding of incompetence, negligence, willful misrepresentation or failure to comply with this chapter or other applicable laws, rules, and regulations.

(i) An O&M provider whose license has been revoked shall be ineligible to reapply for a license until 60 calendar days have passed from the date of this license revocation.

(ii) Any O&M provider, whose license is suspended or revoked, will be required to retake the appropriate exam before their license will be reinstated.

(x) All records pertaining to OSS must be kept, by the O&M professional, for a period of not less than five years.

~~[Ord. H.Ord.061410 §1, 2010; Ord. H.Ord.061107 §1, 2007]~~

**8.40.330 Disciplinary actions involving installers and pumpers.**

(1) Sewage system installers and pumpers may be subject to disciplinary actions, including but not limited to reprimand, probation, suspension, or revocation of their certificate in accordance with the provisions of this section, upon a finding of a failure to comply with the rules, regulations and policies of OSS installation or pumping, or upon a finding of a failure to comply with terms and conditions of prior probation or suspension, or upon a finding of incompetence, negligence, misrepresentation, or intentional and/or willful malfeasance.

(2) In the event of suspension or revocation, no monetary rebate shall be forthcoming for any unexpired portion of the certificate period. If, after revocation of the certificate, the

DRAFT

person desires to reapply for a certificate, the person must wait 12 months prior to reapplication. In the event of suspension or revocation, that person shall not proceed with any further functions of an installer or septic pumper in Lewis County.

(3) For purposes of taking these actions, the health officer may take the following measures:

(a) Convene an informal administrative conference and require the attendance of an installer or a pumper to explore facts and resolve issues associated with allegations of failure to comply with the rules, regulations, guidelines and policies of OSS pumping or installation, as applicable, or upon allegations of incompetence, negligence, misrepresentation, or intentional and/or willful malfeasance. An informal administrative hearing may result in no action, a reprimand, probation, suspension, or revocation.

(b) Place an installer or pumper on probation. Probation may include limits on the types of systems that can be installed, increased reporting frequency and more detailed reporting for pumpers, and more frequent oversight and inspections. Probation will generally be for periods of six months to one year. Violation of any of the terms and/or conditions of the probation may result in the suspension or revocation of the certificate. Probation periods that span more than one certification period shall carry over from one certification period to the next.

(c) Suspend the certifications of an installer or a pumper. Certificate suspension shall be for a specific period of not less than one month and not more than one year. The installer or pumper on suspension will not be allowed to install or pump systems during the period of suspension. Exceeding one suspension in any one year period or two suspensions in any three-year period may result in revocation of certification. Suspension periods that span more than one certification period shall carry over from one certification period to the next. Following suspension, installers or pumpers may request reinstatement of certification by filing a written application for reinstatement. Prior to reinstatement the installer or pumper must meet all current and previous certification responsibilities and requirements, including payment of any reinstatement fee as required schedule of fees of the board, Chapter 18.15 LCC. In the event of suspension, that person shall not proceed with any further functions of an installer or pumper in Lewis County.

(d) Revoke the certifications of an installer or a pumper. For intentional and/or willful malfeasance or serious or repeated violations of any of the requirements of these regulations or any other applicable regulation, or for violation of any of the terms and/or conditions of a probation or suspension, the installer's or pumper's certificate may be permanently revoked subject to appeal provisions under Chapter 2.25 LCC, as modified in

DRAFT

this section. If, after revocation of the certificate, the person desires to reapply for a certificate, the person must wait 12 months prior to reapplication. In the event of revocation, that person shall not proceed with any further functions of an installer or pumper in Lewis County.

(4) Notice of Probation, Suspension, or Revocation of Certification. Prior to probation, suspension or revocation of certification, the health officer shall:

(a) Notify the installer or pumper in writing, stating the reasons for which the certificate is subject to probation, suspension or revocation, and

(b) Provide notice of the consequences of failure to comply with the notice of probation, suspension or revocation, and

(c) Advise the installer or pumper of his/her right to appeal pursuant to Chapter 2.25 LCC, as modified in this section.

(5) Appeals of Suspension or Revocation of Installers or Pumpers Certificates. Except as otherwise provided herein, the Lewis County board of health hearing examiner ordinance process contained in Chapter 2.25 LCC shall be utilized to address appeals of certificate suspension and/or revocation. All hearings shall be convened in accordance with the regulations of the office of the hearing examiner pursuant to Chapter 2.25 LCC and the current hearing examiner policies and procedures, except that in the event of conflict between the provisions of this section and Chapter 2.25 LCC, these following provisions shall apply:

(a) Notification of Hearing. Notice of the administrative hearing shall be given by personal service or certified mail (return receipt requested) to the last known address by the health officer to the person(s) who is the subject of the proposed disciplinary action, and sent by first class mail to any other interested or participating party. The address provided on the application or application renewal will be considered the last known address unless the health officer is notified in writing of a change in address. The notice shall:

(i) Be in writing;

(ii) Include a brief and concise description of the cause/reason for the administrative hearing;

(iii) State the date, time and location of the administrative hearing; and

(iv) Advise the recipient both of the nature and consequences of the requested action, and to whom and where to submit requests for information about the hearing and for copies of any written materials which form a basis for the cause/reason for the hearing.

DRAFT

(6) Post-Hearing Procedures. Within 10 calendar days of the conclusion of the hearing, unless a longer or shorter period is determined to be necessary by the examiner or by the health officer, the examiner shall render a written decision, which shall include findings of fact and conclusions based on the record, and notification of a right of appeal, as follows:

(a) The examiner shall determine from the evidence presented at the hearing whether or not the allegations of failure to comply with the rules, regulations, guidelines and policies of OSS pumping or installation, as applicable, or upon allegations of incompetence, negligence, misrepresentation, or intentional and/or willful malfeasance which formed the basis for the health officer's recommendation to discipline, or to suspend or revoke the certifications of an installer or a pumper, as applicable, has occurred and/or been substantiated.

(b) If the examiner determines that the allegations forming the basis for the recommended discipline, suspension or revocation have occurred and/or been substantiated, the examiner may initiate a course of action which may include discipline, including but not limited to reprimand or probation, and/or suspension or revocation. For purposes of the scope and nature of said course of action, the recommendations of health officer shall be afforded due deference.

(c) The findings and conclusions of the examiner, and the course of action to be taken in light of those findings and conclusions, shall be served on the parties of record to the hearing in the manner set forth in subsection (5)(a) of this section.

(d) Final decisions and actions of the examiner must be appealed to the board of health, as set forth in subsection (7) of this section.

(7) Board of Health Appeal. Any person who has initiated or exercised his/her right to an administrative hearing under this section, and who is aggrieved by the decision or action of the examiner, shall have the right to appeal a final decision or action of the examiner by requesting a closed-record hearing before the board of health.

(a) Petition for review. Any appeal shall be in writing and delivered to the board of health within 10 calendar days of service of the decision or action of the examiner. Such appeal shall operate to stay said decision or action of the examiner, except upon findings by the examiner, as follows:

(i) The existence of an actual or imminent health hazard. (For purposes of this section, "actual or imminent health hazard" means a condition or situation presenting a serious or life-threatening danger to public health and safety.)

DRAFT

(ii) A failure to comply with the terms and conditions for continued installer or pumper certification as specified in a course of action issued to said party in a prior disciplinary, suspension or revocation matter within the previous five years.

(b) Upon receipt of a perfected appeal, including payment of a fee as specified in the Lewis County schedule of fees (on file with the Lewis County board of county commissioners), the health officer shall set a time and place for the appeals hearing before the board of health, and shall give the appellant and parties of record to the examiner hearing written notice thereof. The hearing shall be commenced within 22 calendar days of a perfected appeal, unless the parties agree to extend this deadline; or the board, on its own motion, extends this deadline for not more than 30 days after determining that good cause exists for such extension.

(c) Except as noted in this subsection (7), the administrative procedures and rules of LCC 2.25.130, regarding petitioning for and conducting a closed-record appeal before the hearing examiner, shall apply, as nearly as possible, to appeals before the board of health.

(d) The decision or action of the examiner shall be upheld unless the party appealing said decision or action establishes that:

(i) The examiner engaged in unlawful procedure or failed to follow a prescribed process, unless the error was harmless;

(ii) The decision or action of the examiner was based upon an erroneous interpretation of the law, after allowing for such deference as is due the construction of a law by a local jurisdiction with authority or expertise as to the rules, regulations, guidelines and policies of OSS installation and pumping;

(iii) The decision or action was not supported by evidence that was substantial when viewed in light of the whole record before the board;

(iv) The decision or action was a clearly erroneous application of the law to the facts;

(v) The decision or action was outside the authority or jurisdiction of the examiner or health officer making the decision;

(vi) The decision or action violates the constitutional rights of the party seeking relief; or

(vii) The decision or action was clearly arbitrary or capricious.

(8) Judicial Appeal. An appeal of the final decision of the board of health must be appealed to the Lewis County superior court.

DRAFT

(a) The appeal must be filed with the said superior court within 20 calendar days from the date the board of health's written decision was deposited into first class U.S. mail, properly stamped and addressed to the appellant, or any appeal is thereafter barred. Such appeal shall operate to stay said decision of the board, except upon findings of the board, as follows:

(i) The existence of an actual or imminent health hazard. (For purposes of this section, "actual or imminent health hazard" means a condition or situation presenting a serious or life-threatening danger to public health and safety.);

(ii) A failure to comply with the terms and conditions for continued installer or pumper certification as specified in a course of action issued to said party in a prior disciplinary, suspension or revocation matter within the previous five years. [Ord. H.Ord.061107 §1, 2007]

**8.40.340 Waiver of state regulations.**

(1) The health officer may grant a waiver from specific requirements of this chapter. A request for waiver must be ~~if~~:

(a) ~~The waiver request is evaluated~~ Evaluated by the health officer on an individual, site-by-site basis;

(b) ~~The health officer determines that the waiver is consistent~~ Consistent with the ~~standards in, and the intent of, these rules~~ purposes of this chapter.~~;~~

(~~c~~ 2) The health officer must submit~~s~~ quarterly reports to the department ~~regarding any~~ showing waivers approved or denied; and

(~~d~~ a) Upon review, ~~Based on review of the quarterly reports,~~ if the department finds that the waivers previously ~~granted have not been consistent with the standards in and the intent of these rules~~ are inconsistent, with purposes of this chapter, and DS&G for granting waivers, the department shall provide technical assistance to the health officer to correct the inconsistency, and may notify the local and state boards of health of the department's concerns.

(b) If upon further review, ~~of the quarterly reports~~ the department finds ~~that the inconsistency between the waivers granted and the state board of health standards has not been corrected,~~ waivers previously granted continue to be inconsistent with the purposes of this chapter and DS&G, the department may suspend the authority of the health officer to grant waivers under this section until such inconsistencies have been corrected.

DRAFT

(~~2~~ 3) The department shall ~~develop~~ maintain and update guidance to assist local health officers in the application of waivers.

(4) The department shall publish an annual report summarizing the waivers issued over the previous year. ~~[Ord. H.Ord.061107 §1, 2007]~~

**8.40.350 Enforcement.**

(1) When an OSS is out of compliance with any law or rule regulating OSS and administered by the department or local health officer, the ~~The~~ department or the health officer:

~~(a) Shall enforce the rules of this chapter and of Chapter 246-272A WAC; or~~

~~(b) May refer cases within their jurisdiction to the local prosecutor's office or office of the attorney general, as appropriate.~~

~~(2) When a person violates the provisions under this chapter, the department, health officer, local prosecutor's office, or office of the attorney general may initiate enforcement or disciplinary actions, or any other legal proceeding authorized by law (except as to disciplinary, suspension or revocation actions regarding installer or pumper certifications, which proceedings are initiated pursuant to LCC 8.40.330), including, but not limited to, any one or a combination of the following:~~

~~(a) Informal administrative conferences, convened at the request of the health officer or owner, to explore facts and resolve problems;~~

~~(b) Orders directed to the owner and/or operator of the OSS and/or person causing or responsible for the violation of this chapter and the rules of Chapter 246-272A WAC;~~

~~(c) Denial, suspension, modification, or revocation of permits, approvals, registrations, or certification;~~

~~(d) The penalties under Chapter 70.05 RCW and RCW 43.70.190; and~~

~~(e) Civil or criminal action.~~

~~(3) Orders authorized under this section include the following:~~

~~(a) Orders requiring corrective measures necessary to effect compliance with this chapter and Chapter 246-272A WAC which may include a compliance schedule; and~~

~~(b) Orders to stop work and/or refrain from using any OSS or portion of the OSS or improvements to the OSS until all permits, certifications, and approvals required by rule or statute are obtained.~~

DRAFT

~~(4) Enforcement orders~~ may initiate enforcement action. Enforcement action may include, but in is not limited to:

(a) A notice of correct describing the condition that is not incompliance and the test of the specific section or subsection of the applicable state or federal law or rule, a statement of what is required to achieve compliance, and the date by which compliance is to be achieved;

(b) A notice of violation with or without civil penalty;

(c) An order requiring specific actions or ceasing unacceptable activities within a designated time period;

(d) Suspension, revocation, or modification or denial of permits and licenses as authorized by RCW 43.70.115; and

(e) Civil or criminal penalties authorized under chapter 70.05 RCW and RCW 43.70.190.

(2) An informal conference may be held at the request of any party to resolve disputes arising from enforcement of this chapter.

(3) Notices and orders issued under this section ~~shall~~ must:

(a) Be in writing;

(b) Name the person or persons to whom the order is directed;

(c) Briefly describe each action or inaction constituting a violation of this chapter and the rules of Chapter 246-272A WAC, or applicable local rules;

(d) Specify any required corrective action, if applicable;

(e) Specify the effective date of the order, with time or times of compliance;

(f) Provide notice of the consequences of failure to comply or repeated violation, as appropriate~~. Such notices may include a statement that continued or repeated violation may subject the violator to~~:

~~(i) Denial, suspension, or revocation of a permit approval or certification;~~

~~(ii) Referral to the office of the county prosecutor or attorney general; and/or~~

~~(iii) Other appropriate remedies;~~

DRAFT

~~(g) Provide the name, business address, and phone number of an appropriate staff person who may be contacted regarding an order~~.

(~~5~~ 4) Enforcement orders ~~shall~~ must be personally served in the manner of service of a summons in a civil action or in ~~a~~ another manner showing proof of receipt.

(~~6~~ 5) The health officer shall have cause to deny the application or reapplication for ~~an operational~~ a permit or to revoke, suspend, or modify a required ~~operational~~ permit of any person who has:

(a) Failed or refused to comply with the provisions of this chapter or of Chapter 246-272A WAC, or any other statutory provision or rule regulating the operation of an OSS; or

(b) Obtained or attempted to obtain a permit or any other required certificate or approval by misrepresentation.

~~(7) For the purposes of subsection (6) of this section and WAC 246-272A-0440, a person is defined to include:~~

~~(a) Applicant;~~

~~(b) Re-applicant;~~

~~(c) Permit holder; or~~

~~(d) Any individual associated with subsections (7)(a), (b) or (c) of this subsection including, but not limited to:~~

~~(i) Board members;~~

~~(ii) Officers;~~

~~(iii) Managers;~~

~~(iv) Partners;~~

~~(v) Association members;~~

~~(vi) Agents; and~~

~~(vii) Third persons acting with the knowledge of such persons. [Ord. H.Ord.061107 §1, 2007]~~

**8.40.360 Hearing and appeal.**

Notice of Decision - Adjudicative Proceedings. Except as otherwise provided herein, the Lewis County board of health hearing examiner ordinance process contained in

DRAFT

Chapter 2.25 LCC shall be utilized to address procedural and technical conflicts arising from the administration of local regulations. ~~[Ord. H.Ord.061107 §1, 2007]~~

**8.40.370 Violations and penalties.**

(1) Upon land where any applicable law requires toilet facilities to be provided, it shall be unlawful for any person to cause, suffer, or permit the disposal of sewage, human excrement, or other liquid wastes, in any place or manner, except through and by means of an approved sewage system authorized by these rules and regulations.

(2) The health officer may condemn, according to law, any residence or other establishment which is accumulating or disposing of sewage in a manner contrary to the requirements of these rules and regulation.

(3) Any person violating any of the provisions of Chapters 70.05 and 70.46 RCW or violating or refusing or neglecting to obey any of these rules, regulations or orders made for the prevention, suppression and control of dangerous contagious and infectious diseases by the local board of health or local health officer or administrative officer, shall be guilty of a misdemeanor, and upon conviction thereof shall be subject to a fine of not less than $25.00 nor more than $100.00 or to imprisonment in the county jail not to exceed 90 days or to both fine and imprisonment.

(4) Violations as a Public Nuisance.

(a) Any work done or action taken or product thereof which is contrary to this chapter is hereby declared to be unlawful and a public nuisance;

(b) The health officer shall take steps to abate public nuisances as defined herein. The prosecuting attorney may commence an action or actions, proceeding or proceedings for the abatement, removal or enjoinment of public nuisances as defined herein. The power hereby granted to abate a public nuisance shall be construed broadly.

(5) Cumulative Civil Penalty. In addition to, or as an alternative to, any other penalty provided herein or by law, any person, firm, or corporation which violates the provisions of this chapter, or violates the provisions of the Washington Administrative Code adopted by reference by this chapter, shall be subject to a civil penalty under LCC 1.20.040 for each day of noncompliance as separate and distinct violations.

(6) Collection of Civil Penalty. The prosecuting attorney or the health officer on behalf of the county is authorized to collect the civil penalty assessed pursuant to subsection (4) of this section, by use of appropriate legal remedies, the seeking or granting of which shall neither stay nor terminate the imposition of additional penalties so long as the violation continues.

DRAFT

(7) Compromise, Settlement and Disposition of Suit. The health officer and the prosecuting attorney are hereby authorized to enter into negotiations with the parties or their legal representatives named in a lawsuit to negotiate a settlement, compromise or otherwise dispose of a lawsuit when to do so will be in the best interest of the county. ~~[Ord. H.Ord.061107 §1, 2007]~~

**8.40.380 Severability.**

If any provision of this chapter or its application to any person or circumstances is held invalid, the remainder of this chapter or the application of the provision to other persons or circumstances shall not be affected. ~~[Ord. H.Ord.061107 §1, 2007]~~

DRAFT